GUILD ◆ EDITION

# Woodsmith®

Woodsmith.com

Vol. 42 / No. 248

## HEIRLOOM FARMHOUSE TABLE

## Also:

**5 Must-Have Bits** to Take Your Router Skills to the Next Level

**Moisture Meters—** Why You Should Be Using One in Your Shop

**Time-Tested Technique** for Long-Lasting Mortise & Tenon Joints

# FREE UPGRADE

## ON ANY NEW PROFESSIONAL CABINET SAW

# A $249 VALUE

Buy a new 3.0 HP or 1.75 HP Professional Cabinet Saw between March 1 and April 30, 2020, and we'll offer you:

**a FREE Overarm Dust Collection*** **-OR-** **a FREE Integrated Mobile Base****

SawStop

sawstop.com/upgrade

*Overarm Dust Collection requires a Dust Collection Blade Guard (TSG-DC), which is included with the 3.0HP Professional Cabinet Saw but must be purchased for the 1.75HP model. **Not compatible with the In-Line Router Table

from the editor

# Sawdust

***Reuse, repurpose, and recycle*** has been a common expression for several years now, and most woodworkers I know have been wise to this idea long before it became the trendy thing to do. But one aspect of reusing that has become increasingly popular lately is the use of recycled or reclaimed lumber.

In the past, reclaimed lumber usually meant taking old boards or timbers and planing or resawing them to expose the pristine, old-growth wood beneath the surface. But with the rise in popularity of rustic and farm-style furniture, the appeal of reclaimed lumber today is more often for its weathered, time-worn appearance. And that's exactly the look we were after when building the trestle table on page 46 of this issue.

The lumber we used for this particular project was purchased from Harvest Reclaimed, a reclaimed lumber dealer near Winterset, Iowa. The back story on the lumber is that it was salvaged from a corn crib built in the 1930s near the town of Bouton, Iowa (photo above). In addition to the knots, splits, and nail holes in the wood, you can see the circular pattern of the sawmill blade that was used to cut the lumber decades ago. Although this trestle table would look great in just about any type of wood (thanks to Project Designer John Doyle), I think the reclaimed lumber makes it even more special.

**NEW ENDEAVORS.** I'm excited to mention a couple of new offerings that we've recently launched here at *Woodsmith*. The first is a series of weekend woodworking classes at our shop in Des Moines, Iowa. This will be a chance for some hands-on learning under the direction of the *Woodsmith* staff. Each class will focus on building a different *Woodsmith* project. The class sizes will be kept small to ensure plenty of opportunity for one-on-one learning. To see a listing of the classes for 2020 (and to sign up), just go to *woodsmithshop.com/weekend*.

The other announcement I wanted to make is that we've launched our first woodworking podcast. We're calling it the *ShopNotes* podcast (after our former companion magazine) and it's a weekly dose of light-hearted woodworking conversation. You can subscribe to it for free wherever you get your podcasts. Or you can listen to past podcasts at our website, *Woodsmith.com*. Check it out when you have a chance, I'm sure you'll enjoy it.

Vince


Woodsmith®

**EDITOR** Vincent Ancona
**MULTIMEDIA EDITOR** Phil Huber
**ASSISTANT EDITORS** Erich Lage, Logan Wittmer
**CONTRIBUTING WRITER** Bryan Nelson

**EXECUTIVE ART DIRECTOR** Todd Lambirth
**SENIOR ILLUSTRATOR** Dirk Ver Steeg
**SENIOR GRAPHIC DESIGNERS** Bob Zimmerman, Becky Kralicek
**CONTRIBUTING ILLUSTRATOR** Erich Lage

**CREATIVE DIRECTOR** Chris Fitch
**PROJECT DESIGNER** Dillon Baker
**PROJECT DESIGNER/BUILDER** John Doyle
**CAD SPECIALIST** Steve Johnson
**SHOP CRAFTSMAN** Marc Hopkins

**CONTRIBUTING PHOTOGRAPHER** Crayola England
**SENIOR ELECTRONIC IMAGE SPECIALIST** Allan Ruhnke

**GROUP PUBLISHER** Steven M. Nordmeyer
**ADVERTISING DIRECTOR** Don Schroder
610-821-4425
d.schroder@verizon.net
**AD PRODUCTION COORDINATOR** Kim Hoff
**GROUP PRESIDENT** Peter H. Miller

HOME GROUP
ACTIVE INTEREST MEDIA

**Woodsmith**® (ISSN 0164-4114) is published bimonthly by Cruz Bay Publishing, Inc., 2143 Grand Ave, Des Moines, IA 50312.


**Woodsmith**® is a registered trademark of Cruz Bay Publishing.
**Copyright**© 2020 Cruz Bay Publishing, Inc. An Active Interest Media Company. All rights reserved.


**Subscriptions:** Single copy: $6.95.
**Canadian Subscriptions:** Canada Post Agreement No. 40038201. Send change of address information to PO Box 881, Station Main, Markham, ON L3P 8M6. Canada BN 82564 2911
**Periodicals Postage Paid** at Des Moines, IA, and at additional offices.
**Postmaster:** Send change of address to *Woodsmith*, Box 37274, Boone, IA 50037-0274.

Printed in U.S.A.

WoodsmithCustomerService.com

**ONLINE SUBSCRIBER SERVICES**

- **VIEW** your account information
- **PAY** your bill
- **RENEW** your subscription
- **CHANGE** your mailing or e-mail address

**CUSTOMER SERVICE** Phone: 800-333-5075 weekdays

**SUBSCRIPTIONS**
Customer Service
P.O. Box 842
Des Moines, IA 50304-9961
subscriptions@augusthome.com

**EDITORIAL**
Woodsmith Magazine
2143 Grand Avenue
Des Moines, IA 50312
woodsmith@woodsmith.com

ACTIVE INTEREST MEDIA

PRESIDENT & CEO **Andrew W. Clurman**
SENIOR VICE PRESIDENT, TREASURER & CFO **Michael Henry**
VICE PRESIDENT, AUDIENCE DEVELOPMENT **Tom Masterson**
VICE PRESIDENT, PRODUCTION & MANUFACTURING **Barb Van Sickle**
VICE PRESIDENT, PEOPLE & PLACES **JoAnn Thomas**
AIM BOARD CHAIR **Efrem Zimbalist III**

# contents

No. 248 • Apr/May 2020

## Projects


weekend project

**Carving Board . . . . . 24**

A series of recesses routed into the surface of this carving board create a tree motif. But the recesses serve a practical purpose as well, allowing juices to run off.

shop project

**Miter Saw Station . . . . . 30**

Fold-down wings and onboard storage for a shop vacuum make this mobile stand a practical addition for any shop. Simple plywood construction means it's a breeze to build.

designer project

**Turntable Console . . . . . 36**

This turntable console rocks a mid-century vibe with its clean lines and low, sleek profile. Inside, there's space for components as well as your vinyl collection.

heirloom project

**Rustic Dining Table & Bench . . . . . 46**

Reclaimed lumber and timber-frame design elements give this table and matching bench loads of farmhouse charm. It's sure to be a hit in any home.


## Departments


**Reader Feedback . . . . . 5**

from our readers

**Tips & Techniques . . . . . 6**

router workshop

**Beyond Basic Bits . . . . . 12**

all about

**Food-Safe Finishes . . . . . 16**

great gear

**Moisture Meters . . . . . 20**

woodworking technique

**Drawbore Joinery . . . . . 58**

working with tools

**Flattening Large Surfaces . . . . . 62**

# READER Feedback

**Art Noveau Style**

I was pleased that you had an article on Art Nouveau furniture (No. 245, p. 46). But at the same time, I found the bookstand itself a bit odd. I've been studying Art Nouveau for the past year and am working on a presentation for our club in Pittsburgh.

There are multiple incarnations of the Art Nouveau style, but I have not been able to find an example that is clearly linked to the design you presented.

I understand that your publication slants towards machinery users (that's not a slam, just a fact of life) so I don't particularly fault you for a lack of carving. But other folks with whom I exchange information were also not able to find an example. Could you let me know whose work you chose as a design model?

*Alex Botkin*
*Pittsburgh, Pennsylvania*

Creative Director Chris Fitch replies: *Thanks for the inquiry and feedback on the bookstand. I find Art Nouveau furniture to be fascinating with its energetic and exuberant use of shapes and forms. It is certainly a style that is worthy of notice by the woodworking community.*

*My research yielded a number of pieces. One in particular was a small, French, white oak hutch that I found on an auction site. It featured broad sweeping feet, high sprung arched aprons, and sinuous brackets. Other examples came from Dutch Art Nouveau pieces, including telephone stands and basin stands. These too had the solid footing of the French hutch, as well as overall proportions that I used for the bookstand.*

*Featuring an Art Nouveau project in a woodworking magazine is, however, problematic. Many examples of the style involve woodworking skills such as carving that are difficult to explain and are not always easily approachable for many woodworkers.*

*In addition to "buildability," we also try to feature projects that can fit comfortably into any home in both scale and appearance. With that in mind, I looked for examples of Art Nouveau furniture that might be described as "transitional," moving from the lineal lines of Arts & Crafts to the flowing and organic forms of Art Nouveau.*

*The bookstand is not meant to be a strict representation of the Art Nouveau style, or a reproduction of any particular item, but rather a piece influenced by it. I hope that in the future I can find a project that, within our criteria, fully embraces the fascinating and overlooked style of Art Nouveau furniture.*

**Router Plane**

I read the article on the shop-made router plane (No. 246, p. 28) and think it's a good idea. However, the blade you showed has a notch near the top. Why not add a threaded rod or bolt with a specialty nut into that notch to get a depth adjustment?

*Brett Bertrand*
*Magna, Utah*

Project Designer Dillon Baker replies: *We were trying to keep the router plane as simple as possible, and to that end, we didn't incoporate a depth adjustment into the design. You could certainly add one if that's your preference.*

**You may email comments to *Editor@Woodsmith.com*. Please include your first and last name, city, and state. Comments may be edited for length or clarity.**

Woodsmith SHOP

IOWA PBS
*Sponsoring Station*

RIKON Kreg Old Masters
*Major Program Underwriters*

Titebond THE PRO'S ADVANTAGE™
*Additional Funding*

## Small Parts Ripping Sled

I often find myself in the middle of a project that requires ripping a lot of small parts to a narrow width. The recent model train from *Woodsmith* No. 245 was one of those projects. So, I decided to build a simple ripping sled to help me safely rip the small parts at my table saw.

**RIPPING SLED.** The fixture I came up with is shown here. It's a small sled with a pair of T-tracks in the base to attach an adjustable fence. By moving the fence, you can accurately set the width of the cut (inset photo).

Once you have the width set, the fence tightens down with a couple of knobs. Then, slip the workpiece in place and use the toggle clamp to hold it down while making a cut. It's perfect for ripping those small, narrow pieces while keeping your hands well away from the blade.

*William Aulick*
*Cincinnati, Ohio*

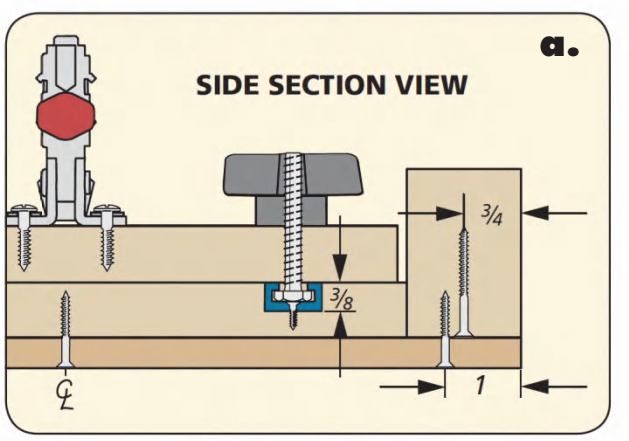


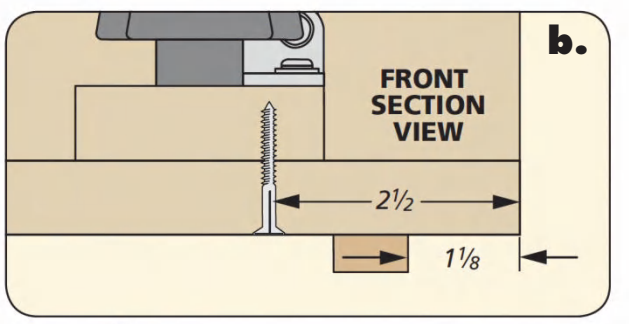


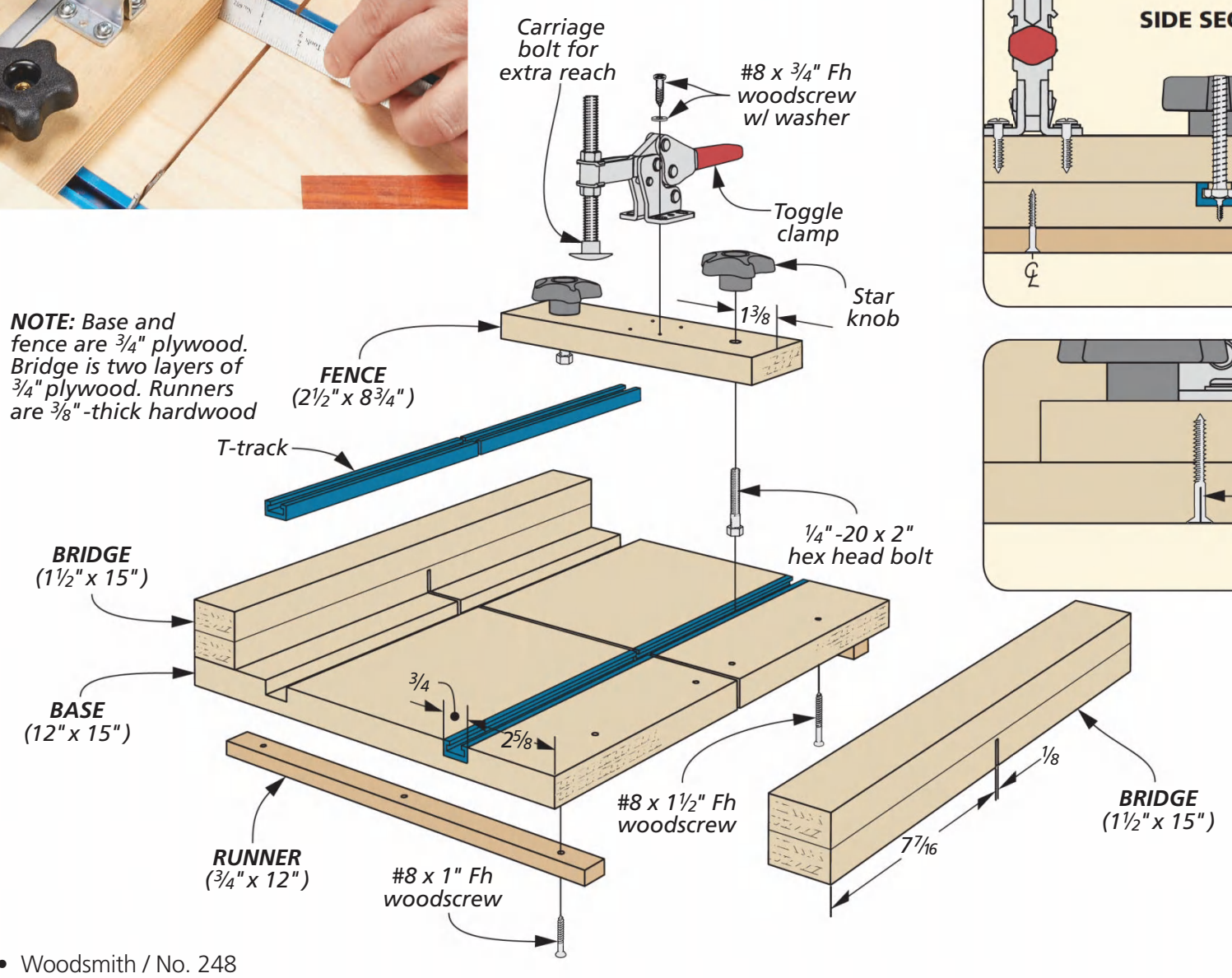

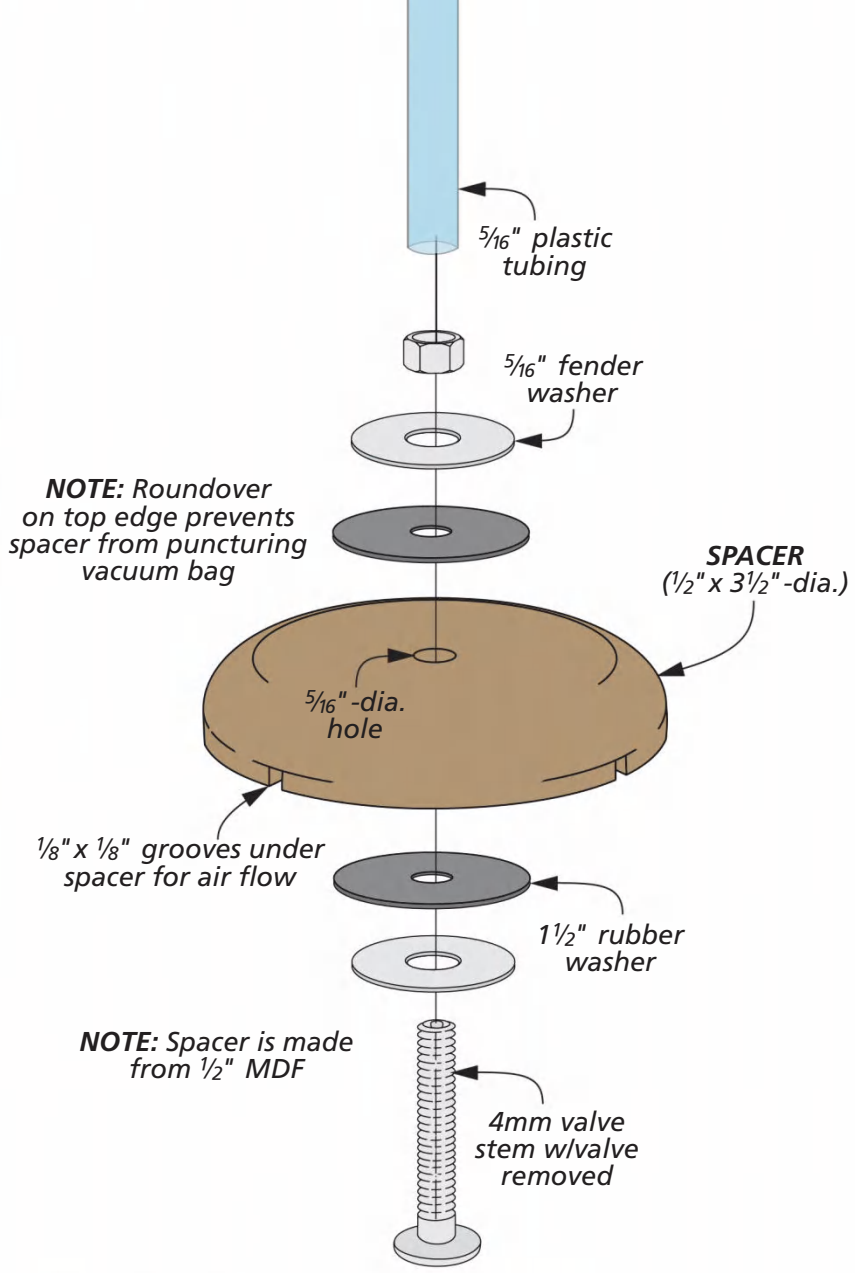


## Budget Veneer Press

A vacuum veneer press is something I've always wanted to experiment with but they're expensive. During a recent trip to a discount tool store, I found a Venturi-style vacuum pump and decided to build my own.

The press I made uses a roll of vacuum saver food bags and a handful of hardware. I cut the bag to the length needed and sealed the end. Then, I made the hookup point for the Venturi pump out of a bolt-on tire valve (with the stem removed), a couple of rubber and steel washers, and a spacer. Before cutting the spacer to shape with a hole saw, I drilled a counterbore and cut grooves in the bottom face (detail 'a').

**USING THE PRESS.** I simply place my workpiece in the bag and fold over the end a couple of times and clamp it with some scraps of MDF to make a seal. The Venturi pump is hooked up to an air compressor and it generates a vacuum, pulling the vacuum bag tight.

*Ken Kroger*
*Folsom, California*

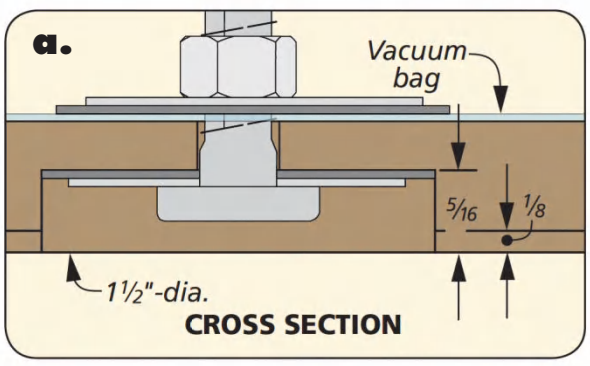

## SUBMIT A TIP TO WIN

### GO ONLINE

If you have an original shop tip, we would like to hear from you and consider publishing your tip in one or more of our publications. So jump online and go to:

**SubmitWoodsmithTips.com**

You'll be able to tell us all about your tip and upload your photos and drawings. You can also mail your tips to "Woodsmith Tips" at the editorial address shown on page 2. We will pay up to $200 if we publish your tip.

### THE WINNER!

Congratulations to Ken Kroger, the winner of a $100 *Lee Valley* gift card.

Illustrations by: Becky Kralicek

**Quick Reference Clamps.** *Dennis Volz* of Denver, *CO* uses a highly visible oil paint pen to mark all of his clamps with the maximum sizes they can hold. Not only does Dennis mark the maximum width of the jaws, but he also marks the maximum depth as well (inset photo). Now, when he reaches for a clamp, he's sure that it will fit the job at hand.

**Brush Saver.** *Manus Cline* of *Grinnell, IA* uses a trick to keep his brushes from drying out while applying finish. He uses a silicone popsicle mold to hold foam brushes. After applying finish, Manus can put the used brush into the tube and seal it. Then, when he needs to apply another coat, he simply pulls the brush out and it's ready to use.

**Sizing Peg Hooks.** *Peter Geschwindner* of *Milton, PA* discovered that rubber tubing slipped over the back of a pegboard hook was the perfect solution for making them fit in larger pegboard holes.

**Dust Free Bins.** *Henry Wittmer* of *Runnells, IA* drills small holes in the bottom of hardware bins. Now, he can shake the bin over the trash to remove the dust and leave clean hardware.

## Shop-Made Roller Stand

A recent video tip from *Woodsmith* showed a shop-made roller that attached to a workbench. I thought it was a great idea, so I built the roller but with an adjustable base, like you see here.

**TELESCOPING BASE.** The modification I made turns the PVC roller into a traditional roller stand. I did that by adding a telescoping base. The base is nothing more than a wide platform that has a column on it. The column receives a post (with the attached roller), and the entire thing slides up and down to accommodate different machinery heights. It works like a charm and is a great addition to my shop.

*Tom McDonough*
*Middlesex, Vermont*

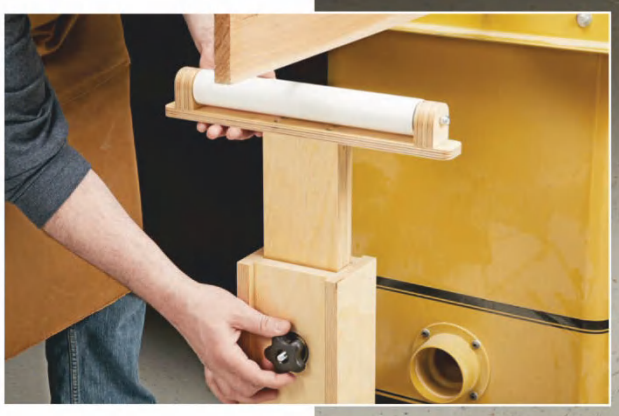

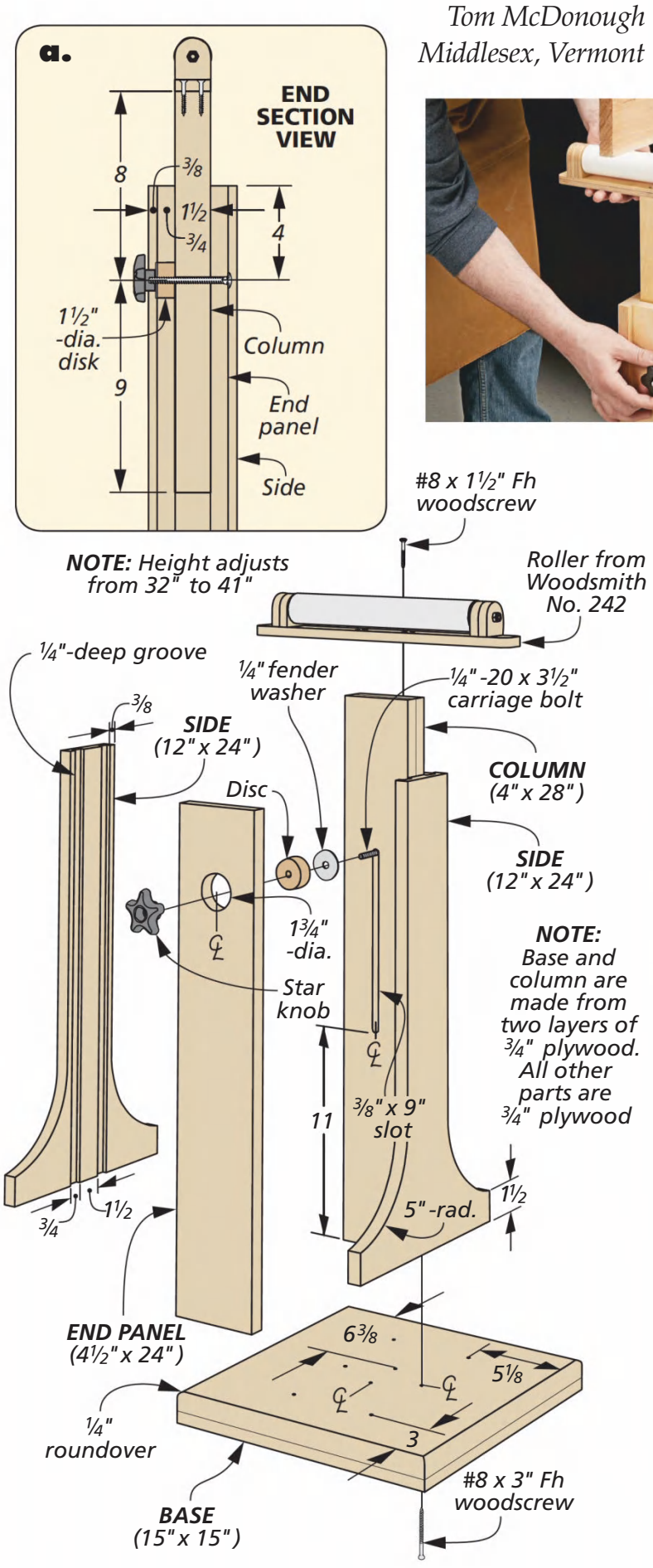



DIGITAL WOODSMITH

**RECEIVE FREE ETIPS BY EMAIL**

Now you can have the best time-saving secrets, solutions, and techniques sent directly to your email inbox. Simply go to:

***Woodsmith.com***

and click on,

**Woodsmith eTips**

You'll receive one of our favorite tips by email each and every week.

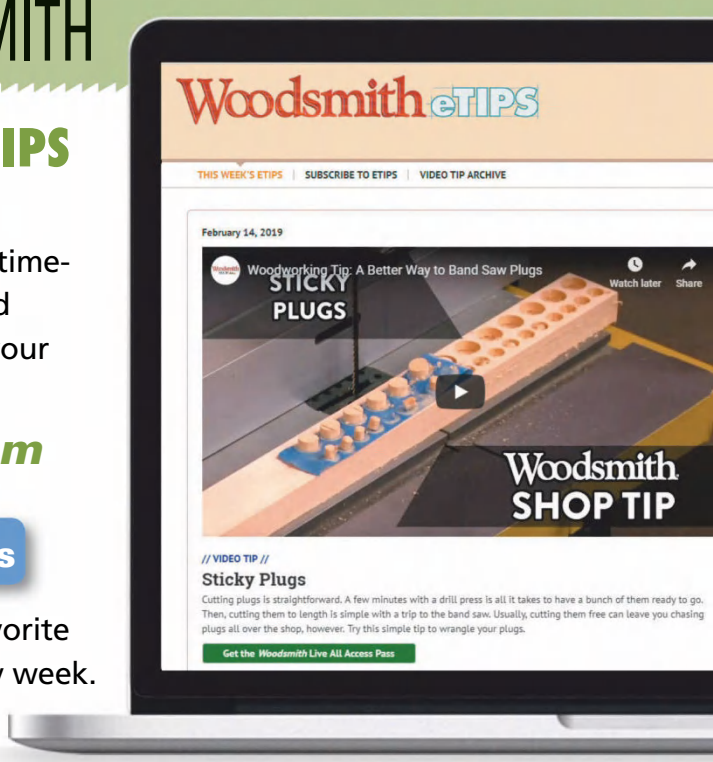

# Basic+ Router Bits

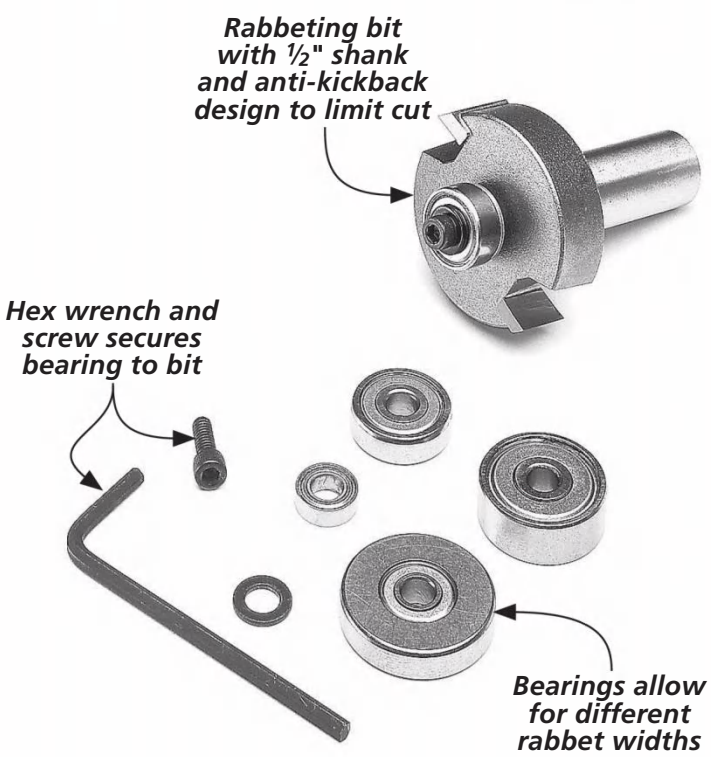


▲ There's more to a rabbeting bit than meets the eye. It's actually a set of parts that quickly and easily allows you to create rabbets of different widths.

Like most woodworkers, I bought a basic router bit set when I got my first router. It contained a few different size straight bits, a pair of roundover bits, and a single cove bit, along with a flush-trim bit and a chamfer bit. I used them on just about every one of my projects for the first couple of years for everything from basic joinery to decorative edge treatments.

The basics were one thing, but it wasn't long before I found that small set of router bits was a little limiting. To expand my options and capabilities, I began to add other bits to my basic collection.

**BASIC+ ADD-ONS.** The five "basic+" bits that follow are the ones I added first. They're indispensable for a wide range of tasks. In some cases, they make the task easier and safer to accomplish. And for others, it's the only way to complete the job at hand.

## RABBETING BIT

One of those basic+ bits that meets both of those needs is the rabbeting bit. The style I picked up is shown in the photo at left. It features a ½"-dia. shank and a beefy body. This extra mass keeps the bit from bogging down as you cut through hard materials, while at the same time leaving a clean, crisp cut.

**CHANGING THE SIZE.** You'll also notice the bit comes with a set of bearings. By swapping out the bearing, you can change the width of the cut and therefore the size of the rabbet. Since a fairly large rabbet can be cut with some of the bearings, the bit features a large body and small gullet to limit the amount of material that can be removed at one time, minimizing any chance of kickback.

**LARGE PIECES.** The first task I had for my rabbeting bit was cutting



Written by: Bryan Nelson

some rabbets for a cabinet I was building. The workpieces were fairly big. Cutting them with a dado blade at the table saw would have been challenging at best, unsafe at worst.

So instead, I installed a rabbeting bit in my hand-held router, clamped the panel to my workbench, and cut the rabbet safely without any hassle.

**INSIDE CUTS.** That same project also needed some doors. But instead of solid-wood panels, I wanted to use some decorative glass panes. This meant I couldn't really install the panes as the doors were built.

Instead, I used the rabbeting bit to rout a rabbet along the inside edge of the opening, like the ones in the main photo on the previous page. With a rabbeting bit, this process is quick and easy. The only downside is the rounded inside corners. Depending on the project design, you may have to square them up with a chisel. But in my mind, that's a small price to pay.

## PLYWOOD BITS

The next basic+ bit is a problem-solver when it comes to joinery. Specifically when you use straight bits to create dadoes and grooves in workpieces, which is something I often need to do when creating solid joinery for large cabinets.

Plywood bits make quick work of creating precision dadoes and grooves for plywood panels.

Straight bits create perfectly flat-bottomed dadoes and grooves, which is great. But if the material you're using for your project is plywood, you often end up with loose-fitting joinery.

**UNDERSIZED PLYWOOD.** The reason is that the thickness of the plywood is slightly undersized from its nominal dimensions. So any dado or groove you cut with an ordinary straight bit will be just a bit too big, resulting in a loose, unsightly joint.

Plywood bits solve this problem as they're sized to match typical hardwood plywood. Sets often include the three most common sizes of straight bits (¼", ½", and ¾") for undersized plywood.

Depending on the manufacturer, the bits will be undersized by either 1/32" or 1/64", so it pays to measure your plywood in a few spots. This way, you can find the set and sizes that will work best for the materials you use. By using plywood bits instead of standard straight bits when the task calls for it, you'll end up with a better fit and a more solidly built project.

## V-GROOVE BIT

For the carving board on page 24, we used a specialized bit that's been in my basic+ set for a number of years. And that's a V-groove bit, like the one you see at the lower left.

**MULTIPLE ANGLES.** V-groove bits are used for a variety of tasks, from cutting grooves for making signs to making beadboard panels. They come in a wide range of angles, from 22° to 135°. The first one I would add to any set is the 90° version, as I find it the most useful.

**CHAMFERING.** A V-groove bit isn't just a one trick pony. By installing it in your router table and using a fence (or hand-held with an edge guide), a V-groove bit can double as a chamfer bit. You can see how this works in the lower photo at left.

This ½"-shank bit consists of a pair of cutting edges that form a 90° angle to create V-grooves (upper photo). Used at the router table with a fence, it doubles as a chamfer bit (lower photo).

A round-nose bit (right) is really just a core box bit (left) with longer cutting edges for making deeper cuts.

## CORE BOX BIT

Another bit I've added to my collection is the core box bit (far left photo in margin). A core box bit looks similar to a cove bit, but without the bearing. It's used where you need to cut a groove with a round bottom, like the juice groove you see in the photo at right. And they're great for decorative fluting in trim pieces for cabinetry projects and built-ins.

**OPTIONS.** These bits come in different sizes, in both ¼" and ½" shanks, and may either be solid carbide or carbide tipped. The smaller diameter bits often have a single cutting flute while the larger sizes feature two flutes.

**LONGER CUTTING.** As you shop for these bits, you'll run across ones that look very similar. The key difference is they feature longer cutting edges, like the one at the right in the margin above. Often referred to as round-nose bits, they allow you to make deeper grooves in your workpiece.

Since there's no bearing to guide either style, I typically use them in a router table with a fence. You can also work with them using a hand-held router with a bushing and templates, or using an edge guide.

A simple core box bit makes it easy to create grooves like the one in the cutting board above. To do this, you'll need a bushing for your router along with a shop-made template.

## DADO CLEANOUT BIT

My last basic+ bit solved one of the early issues I had with dadoes and grooves cut with a dado blade. The dado blade I used left a rough bottom. The end result was a joint that didn't look all that great, like the one you see in the left photo below. The solution to this problem is a dado-cleanout bit, like the one shown at right.

This bit is really just a short version of a pattern bit. They come in a wide range of sizes (diameter and cutting length) in both ¼" and ½" shanks.

I find the ½" diameter with the ¼" shank to be the most useful. This allows the bearing to fit inside the dado and ride against the dado edge. This keeps the overall width of the dado the same but allows the sharp cutters on the bottom of the bit to trim the surface flat and smooth for a better joint, as you can see in the center photo below.

**PERFECT MORTISES.** A dado cleanout bit also works great for creating hinge mortises. All you need to do is size a jig to match the size of the hinge (lower right photo). After a few minutes work with a chisel squaring up the corners, you'll have a perfect-fitting hinge mortise.

Any or all of these basic+ bits are sure to take your woodworking game up a level or two. W

A typical dado cut with a dado blade leaves behind chipout and a rough surface.

Using a dado cleanout bit results in a smooth, flat bottom for a clean, tight-fitting joint.

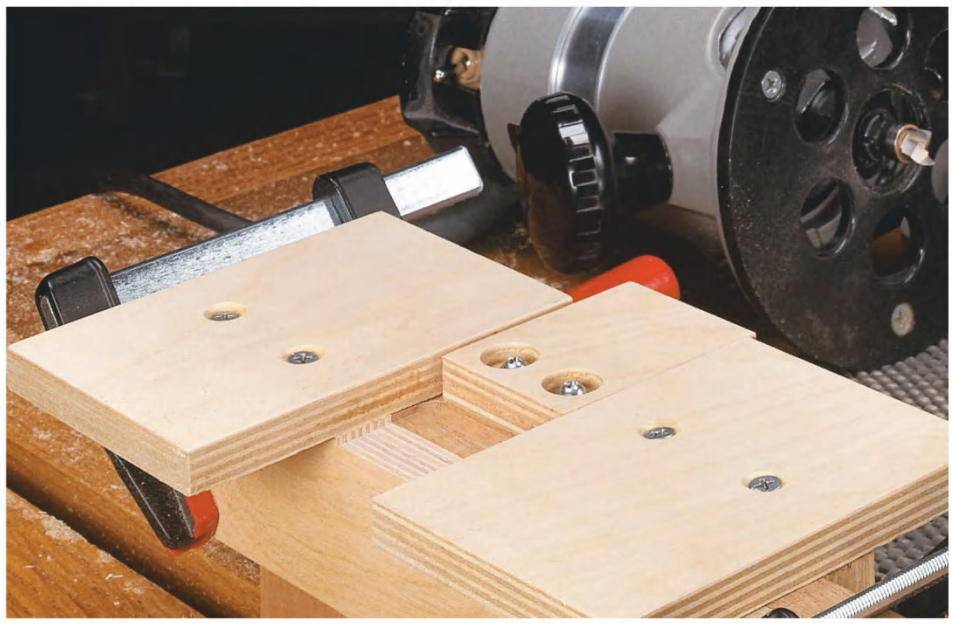

Dado cleanout bits (shown above right) can do more than create clean dadoes and grooves. With a shop-made template, the bit makes quick work of creating perfectly sized hinge mortises.

# Woodpeckers® Precision Squares

## The Most Trustworthy Tool in Your Shop

**Success in the workshop** depends on accuracy in your machinery set up, layout work, and assembly checks. All three jobs call for an accurate, well-made square, and here are several to choose from.

**The cores of our squares** are one precisely machined piece. ***Square*** is determined by our CNC milling centers and verified by our computer controlled optical inspection system. The cheeks added to this central core are narrower by a quarter of an inch, forming a shoulder not found in traditional square designs. The shoulder keeps your square on the edge of a board without a hand from you. We use this same fundamental design in squares from 6" to 26" and with two different core materials.

**Our familiar anodized** aluminum squares excel at checking cabinet and furniture assemblies as well as striking lines square. Our new durable, heat-treated stainless-steel squares, with their 1/16" thick blade and laser cut scribing notches are ideal for critical measuring and marking tasks, machinery setup and checking the edges of stock.

**The precise scale** graduations on Woodpeckers squares are permanently laser-engraved, high contrast markings, designed to last for generations.

**We guarantee** our squares to ±0.0085° for the life of the tool. If you ever find your square outside that tolerance, we'll fix it or replace it.

UNMATCHED ACCURACY
LIFETIME
Woodpeckers
GUARANTEE
EST. 1988

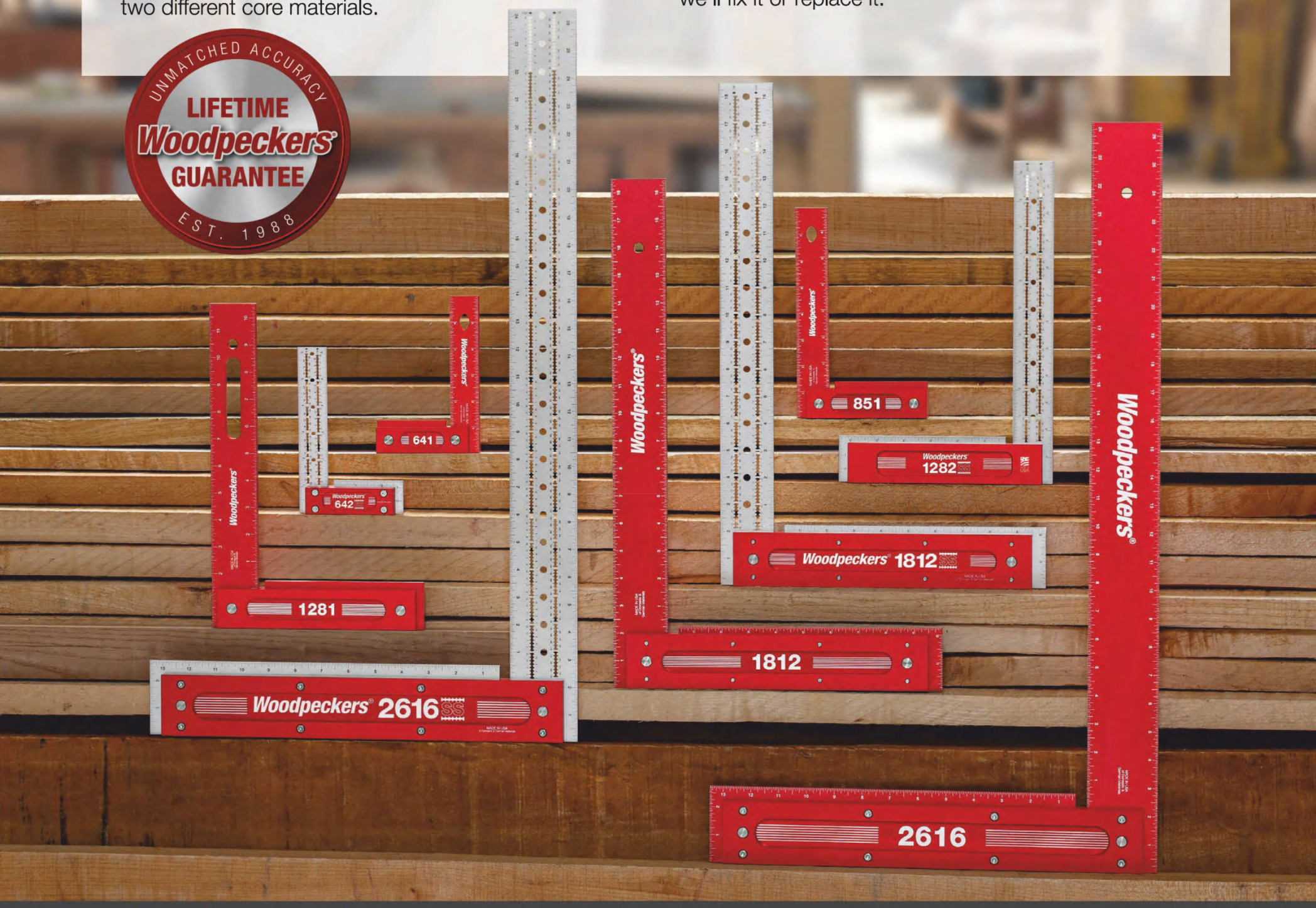

Woodpeckers, LLC • Strongsville, Ohio • 800.752.0725 • ***woodpeck.com***

# Food-Safe Finishes

With the carving board in this issue, one of the key discussions we had was what type of finish to use on the surface. And the reason is simple — you want to be sure to use a finish that's considered safe for food contact.

**IT'S ALL SAFE.** The reality is that all finishes sold today are safe for food once they've fully cured. This is the position of most finishing experts and one that's shared by a large majority of woodworkers (myself included).

However, that doesn't necessarily mean that all finishes are created equal. Here's a look at some of the pros and cons of the various "food-safe" finishes that you're likely to come across to help you make your choice.

## NO FINISH

The simplest option for a food-safe finish is to skip it altogether. With no finish applied, there's nothing for the food to make contact with. And another upside is you never have to worry about reapplying the finish down the road to refresh the look. Old wood bowls and platters attest to the validity of this option.

Of course, not applying any finish does have its downsides. Any liquid that makes contact may be absorbed by the wood, causing the fibers to rise, roughing up the surface. And depending on the adhesive used to assemble the project, it could break down the bond. Finally, some foods may leave stains that are difficult to remove. The end result is a surface that may end up looking a little worn and weathered over time.

## FILM & OIL FINISHES

Let's say going natural isn't an option. The next choice is using what many of us are familiar with, a film or oil finish. A film finish provides the ultimate in protection by sealing the surface, as you can see in the lower left photo on the opposite page.

For projects that are only going to be used for serving, it's a great choice. And cleanup is a simple matter of a quick scrub and rinse.

But it's not the best choice if your project will be used for cutting. The resulting scratches and scars allow liquids to seep underneath. This can delaminate



Written by: Bryan Nelson

the finish and allow bacteria to grow. No one wants finish particles in their food, and ingesting bacteria usually isn't a good idea.

This brings us to oil finishes. A typical oil finish, like the boiled linseed oil in the photo at right won't leave a film or trap bacteria. But most contain additives to help them dry and harden more quickly. And while safe once cured, many woodworkers still prefer not to use them.

▲ You'll find a wide range of food-safe commercial finishes that can be used on projects. Choosing the right one for your projects means doing a little research so you know what's in each product before you use it.

## VEGETABLE OILS

That brings up the option of using cooking oils, such as corn, canola, or olive oil. What could be better than using a product that we typically consume, since we cook with them?

**OXIDATION.** The main reason not to use ordinary cooking oils is they can turn rancid. There's a lot of science behind why this happens, but it comes down to the fats in the oils oxidizing once exposed to air. Heat, light, water, and even certain microbes can accelerate the process.

If the oil on a cutting board or serving tray does go rancid, it can impart a bad taste to any food you place on the surface. But the most likely affect is it's just going to smell bad.

The worst case scenario is that over time the oil may develop toxic compounds. Although that's typically only the case with bottled oils stored improperly for long periods.

## BETTER OPTIONS

At this point, it may sound like there are no options for a natural finish that is also safe for food. Fortunately, that's not the case. What follows are some good natural choices for your next project.

**WALNUT OIL.** Walnut oil is a natural drying oil often sold in grocery stores as a salad oil. Woodworking suppliers sell a version of it as a finish. This type has been modified so it dries more quickly, but it's accomplished without using metallic driers or solvents. So if you're looking for something natural, it's a good choice.

Another advantage of using refined walnut oil is that the refining process destroys the proteins that can cause some people to have an allergic reaction to the oil. Check the label of the product you're using to make sure it's refined.

**TUNG OIL.** Another option is pure tung oil which is extracted from the nut of the China wood tree. Tung oil is often a base for commercial finishes that have added driers and solvents.

They're typically labeled as "tung oil finishes" and aren't pure tung oil. Be sure to check the label of the product before you buy it if you're goal is a more natural finish. Tung oil does provide good water resistance and it typically won't impart much color to the wood.

**RAW LINSEED OIL.** Nuts and vegetables aren't the only natural source of oil. Another is linseed oil, which is pressed from flax seed.

Unlike boiled linseed oil, raw linseed oil contains no additives. And although it's a drying oil, it takes longer to dry. The upside is it imparts a warm color to most woods and it's easy to apply.

▲ Applying a film finish is the ultimate in protection since it seals the surface. The challenge is keeping it from being cut or scratched and allowing liquids to seep underneath, which may ruin the finish.

## MINERAL OIL

As a derivative of petroleum, mineral oil is in a class of its own. It can't be classified as a natural oil, but it's completely safe for food contact. Unfortunately, it's a non-drying oil so it remains "wet" long after it's been applied.

On the upside, it's odorless, colorless, and tasteless. For these reasons, many woodworkers use it as their main finish for cutting boards and bowls that will contact food. But for some, the petroleum base is enough for them to shy away from using it on their projects.

If you're one of the former, you probably already know how easy it is to find at pharmacies and grocery stores, where it's sold as a laxative, or in paint or hardware stores where it's labeled as butcher block oil. If you're in the latter group, the next section may interest you.

▲ A home-brew choice for a food-safe finish is to mix MCT oil with melted beeswax. Since beeswax is flammable, this should be done in a double boiler, or by melting the wax in a glass jar placed in a pot of water.

## A "NEW" OPTION

While I was looking at all the options for food-safe finishes, I ran across something that was new to me. And that's using coconut oil as a finish.

Coconut oil is a cooking oil that's solid at room temperature. Like most cooking oils, there's always the concern about whether and how fast it may go rancid.

**REFINE IT.** Fortunately, there's a version available that minimizes the issue and creates some benefits. It's called MCT oil. MCT stands for medium-chain triglycerides. This version of coconut oil is refined to separate out some of its main components.

**BENEFITS.** The result is a coconut oil that stays liquid at room temperature, has a more stable shelf life, doesn't smell like coconut, and, more importantly, is safe for consumption. The process also means it's much less likely to go rancid over time than some of the other oils I mentioned earlier.

There is a challenge with finding the right MCT oil. It's sometimes confused with fractionated coconut oil, which although very similar, is often only intended for external use. Plus, MCT oil can be made from something other than coconuts, like palm kernel oil. I prefer the coconut oil version.

**CREATE A FINISH.** I've started experimenting with using MCT

## REVIVE A CUTTING BOARD

**Clean & Sand.** After a good scrub, let things dry. Then sand the surface smooth to remove cuts and scratches.

**Ease the Edges.** To avoid corners that can be easily damaged, ease the edges with a small roundover or chamfer.

**Apply the Finish.** Finally, wipe on the new finish, working it into the surface. Then buff it with a clean cloth.

oil as a standalone finish and it works just fine, along the lines of mineral oil. But if you're looking for something with a little more protection, especially from liquids, you can do what woodworkers who use mineral oil do, they mix in some beeswax.

Beeswax is a natural product that's used widely. Unlike MCT oil, it's solid at room temperature. The simplest and safest way to mix it into the MCT oil is with a double boiler or a jar resting in a pot of water (upper photo, previous page). Simply cut the beeswax into shavings and mix them into the warmed oil a little at a time.

The ratio that I use is about 50 grams of beeswax to 6 liquid ounces of oil, but it's okay to experiment. Once it's all mixed in, I like to pour the mix into smaller containers, as in the photo at right.

Depending on the ratio of the two ingredients, the mix is going to "harden." It won't be as hard as the beeswax. The MCT oil will make it more of a soft paste, which is easy to apply.

**APPLYING THE FINISH.** With new projects, I found it best to apply a coat of MCT oil first, letting it absorb into the surface. After drying overnight, I follow up with the beeswax mix. Simply rub it into the surface with a rag and then buff it with a clean cloth. The end result is a smooth, satin look that gives the surface a nice feel.

**REJUVENATE.** Applying the finish to a fresh surface is pretty simple, but if you have a cutting board or bowl you're looking to refresh there are some extras steps I like to follow. The box on the previous page covers that process.

**YOUR CHOICE.** There are a lot of finish options available for projects that will make contact with food. With all the information detailed here, you'll be able to make the finish choice that's right for you. W

After combining the MCT oil and beeswax, the mixture can be poured into smaller containers for storage and use. It's simply rubbed into the surface of the wood.


EST 1928

WOODCRAFT®

Over 75 Stores Nationwide – Stop In And Visit With Us!

QUALITY WOODWORKING TOOLS • SUPPLIES • ADVICE®

For A Free Catalog Or To Find Your Local Woodcraft Store, Visit woodcraft.com Or Call 800-225-1153. Follow Us: 20WS05H

# Woodpeckers®

## Precision Woodworking Squares

- Guaranteed accurate to ±.0085° for life.
- One-piece blade machined to exacting tolerances.
- Wall-mountable storage case.
- Available in inch or metric.

UNMATCHED ACCURACY
LIFETIME Woodpeckers GUARANTEE
EST. 1988

12" 1281 Square....**$119.99**
12" 1282SS Stainless Steel Square.....**$159.99**

## Precision T-Squares

- Precisely spaced 1mm holes machined every 1/16".
- Laser engraved scale accurate to ±.004".
- Outer edges machined to a 30° bevel for easy reading.
- Wall-mountable storage case.

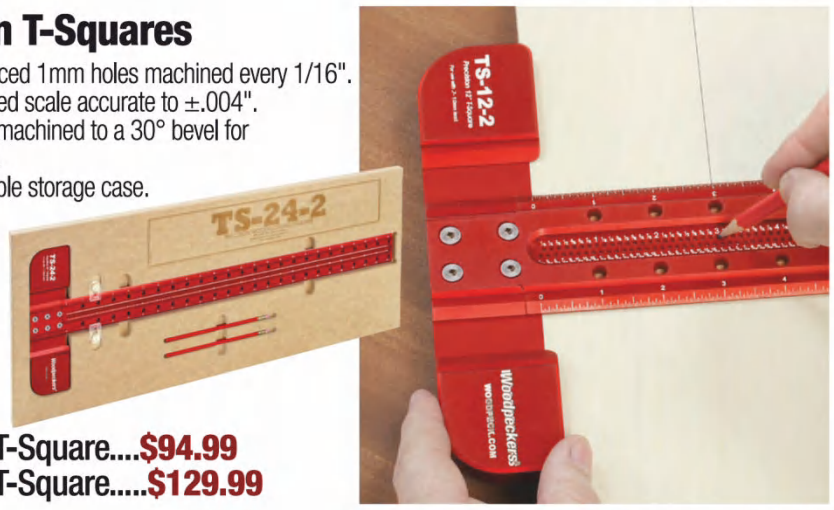


12" TS-12 T-Square....**$94.99**
24" TS-24 T-Square.....**$129.99**

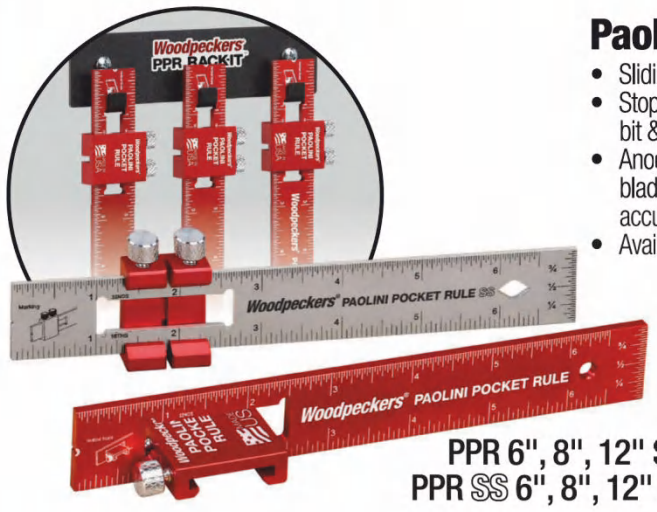


## Paolini Pocket Rules

- Sliding stop simplifies repetitive marking.
- Stop doubles as stand to set router bit & saw blade height.
- Anodized aluminum or stainless steel blade with laser engraved scale accurate to ±.004".
- Available in inch, metric or combination.

PPR 6", 8", 12" Set & Rack-It.....**$124.99**
PPR SS 6", 8", 12" Set & Rack-It....**$149.99**

## Saddle T-Squares

- Scribing holes on 1/32" spacing.
- One-piece construction with 3/4" deep wrap-around marking.
- Saddle-T Rack-It holds all 4 sizes of Saddle T-Squares.
- Available in inch or metric.

Saddle T-Square Set & Rack-It.....**$299.99**

NEW!

## Slab Flattening Mill PRO

- Wider, thicker, thinner & cleaner than the original.
- Router carriage now has adjustable height & built-in dust ports.
- Standard width of 45" expands to 62" with optional extension.
- Standard length of 59" expands to 132" with optional extension.
- Flatten stock as thin as 3/4" & up to 3-7/16" without shimming.
- Straight-line edges on stock up to 2" thick.

Rail can be positioned for narrower slabs or all the way to the edge!

Slab Flattening Mill PRO....**$899.99**

Router, plywood base & connection hoses not included.

## ULTRA·SHEAR™ by Woodpeckers®

### Parting Tool-Ci

- Creates crisp, clean, narrow parting cuts.
- Sharpest, longest lasting carbide inserts on the market.
- 3/32" cutting width saves stock & minimizes resistance.
- Two insert profiles:
  - Fluted cutter installed
  - Square cutter optional

Parting Tool-Ci....**$79.99**

### Woodturning Tools

- Eliminate the drudgery of sharpening with nano-grain carbide inserts mounted to hardened alloy steel shafts.
- Sharpest, longest lasting carbide inserts on the market.
- Exclusive shaft design delivers both fast shaping & fine finishing.
- Square, round & detail tools available individually or as a set.

Mid-Size Woodturning Tool Set ....**$269.99**

**Woodpeck.com**

MADE IN USA

## Offset Base System

Made for Festool Domino

- Attaches to both Festool Domino DF-500 & DF-700 XL.
- Wider, deeper referencing surface improves stability.
- Precision-milled spacers center mortise on standard dimensions.
- Outrigger carries stops for accurate repeat spacing.

Domino not included.

**Offset Base System with Systainer Case....$429.99**

## Parallel Guide System

Made for Festool Track Saws

- Makes repetitive, parallel cuts with table saw accuracy.
- Maximum rip capacity of 52".
- Narrow stock guides deliver accurate results down to 1/4".

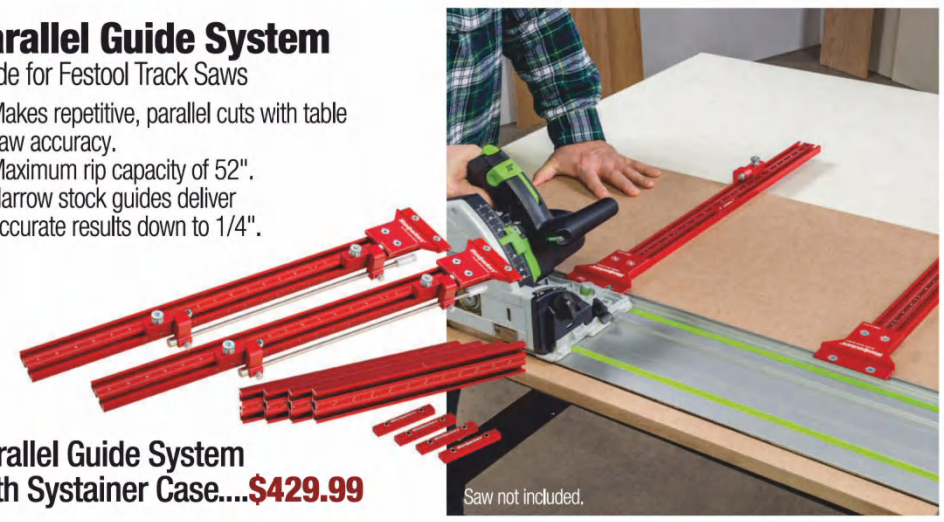

Saw not included.

**Parallel Guide System with Systainer Case....$429.99**

Clamps not included.

## Universal Clamp Support

- Keeps your clamps upright & evenly spaced.
- Works with parallel jaw, bar or pipe clamps.
- Elevates work off clamps, eliminates black marks.
- Aids in squaring and aligning boards.

**Universal Clamp Support.....$59.99**

## Miter Clamping Tool

- Directs clamping pressure across miter joints.
- Works with any brand or style of clamp.
- Two thickness sizes available, 3/4" & 1-1/2".
- Ribbed surface grips stock without marring.

Clamps not included.

**MCT-75 - Set of Two....$21.99**
**MCT-150 - Set of Two....$24.99**

## Clamping Squares PLUS & CSP Clamps

- Positions stock at right angles for joinery & fastening.
- Precision milled for both inside & outside alignment.
- Works with any clamp.
- CSP Clamps add speed & convenience.

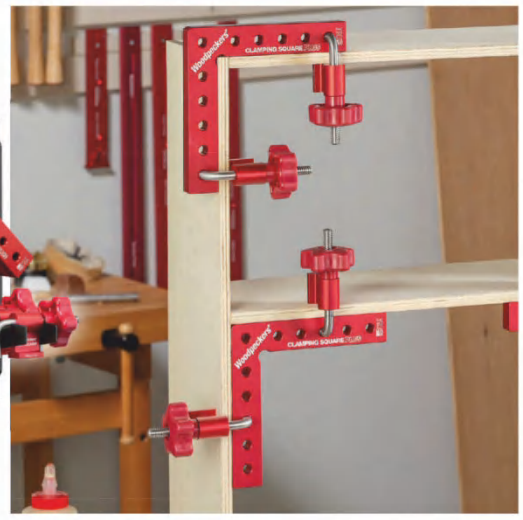

**Clamping Squares PLUS Rack-It Kit....$239.99**

## Clamp Rack-It™

- Holds up to 6 heavy-duty parallel jaw clamps.
- Installs on any stud or solid wall surface.
- Simple installation with (2) lag bolts *(included)*.

Clamps not included

**Clamp Rack-It 4-Pack....$119.96**

# ULTRA·SHEAR™ by Woodpeckers®

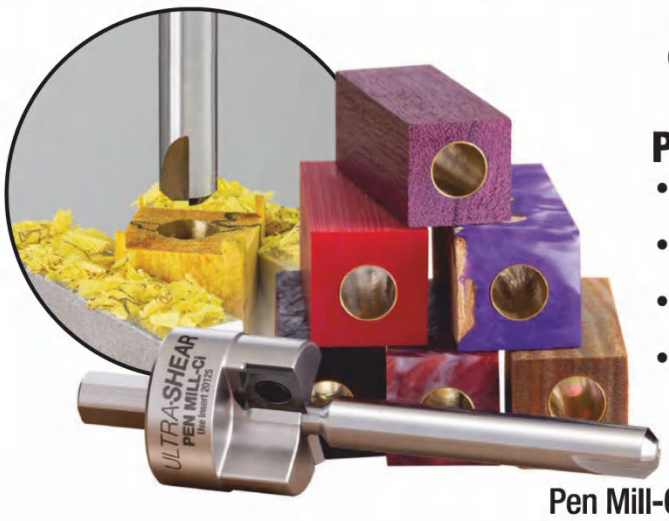


## Pen Mill-Ci

- Trims pen blanks square & flush with insert.
- Razor-sharp carbide inserts hold up to exotic materials.
- 12 Pilot Reamers cover almost every pen kit made.
- Cleanest cutting, longest lasting pen mill on the market.

**Pen Mill-Ci 13-Pc Set....$169.99**

## Pen-Sized Woodturning Tools

- Eliminates need to resharpen.
- Sharpest, longest lasting carbide inserts on the market.
- Perfect for pens & other small turnings.
- Square, round and detail tools available individually or as a set.

**Pen-Size Woodturning Tool Set ....$219.99**

*For more sizes & ordering options for these tools plus hundreds more, visit* ***Woodpeck.com***

# Moisture Meters

In my experience, most of the problems that arise with a wood project are due to moisture, in one way or another. Moisture causes expansion and contraction. It can also lead to finishing issues, along with general movement and warpage.

With that in mind, it amazes me how few woodworkers own a moisture meter and check their stock before beginning a project. A moisture meter, in simple terms, reads how much moisture is present in the wood. Even a difference of a few percentage points in moisture can cause issues during building. Ensuring that your wood is at the correct moisture content helps get your projects off on the right foot. So here, I want to take a look at a couple of different types of moisture meters, and explain the benefits of each.



Written by: Logan Wittmer

## PIN METER

In the world of moisture meters, you'll find two styles — pin and pinless meters. Pin meters tend to come in at a lower cost (however, there are high-end models) and are often easier to find.

**RESISTANCE IS FUTILE.** Pin meters, like you see at right, have a pair of pins. The pins look like small nails and are usually ¼" or ⅜" long. Pin meters work by pushing the pins into the wood. Then current is passed through the pins and the resistance is measured between them.

One of the most common brands is the *General* moisture meter (right photo). This is actually the first meter I purchased. The thing I really like about this meter is that it's cheap. I paid less than $30 for this model, and for the money, it has some decent uses. But first, let's talk about some of the drawbacks to a pin meter.

**LITTLE HOLES.** With a pin meter, you have to push or pound the pins into the wood to get a reading. That means that you're left with two little holes (inset photo above) that you'll have to deal with. Second, the pins only take a reading where they touch the wood. So, if you want to check the moisture in a thick board, you'll need to cut into it to take a measurement.

Another downside with pin meters is what they read, which is resistance. Resistance is easy to measure, but it can easily be skewed by a tree's chemical make-up. If a tree grew in an area with a high concentration of minerals, it could cause the wood to be more, or less, conductive, which skews a resistance reading. Frozen stock (such as lumber drying outside) will not give an accurate reading either.

**DISPOSABLE.** I prefer inexpensive pin meters like this for less-demanding tasks, such as measuring firewood or framing lumber. Plus, if it gets dropped and damaged, it's not a huge deal. While this grade of meter is better than no meter, you may want something more accurate for measuring stock in your shop.

▲ Pin meters measure moisture with the use of two pins, and *General* claims their pin meter is accurate within two percentage points.

## WHAT ABOUT KILN-DRIED LUMBER?

You may be wondering if you need to measure the moisture in kiln-dried lumber that you purchase from a dealer. The short answer is yes. When commercial lumber producers are drying lumber, they monitor the moisture content of an entire stack of lumber. The goal is to have the average moisture in the 6-9% range. But, as you can see in the graph to the right, that average leaves some lumber still slightly wet, or overly dry. So it's still a good idea to verify kiln dried lumber's moisture content.

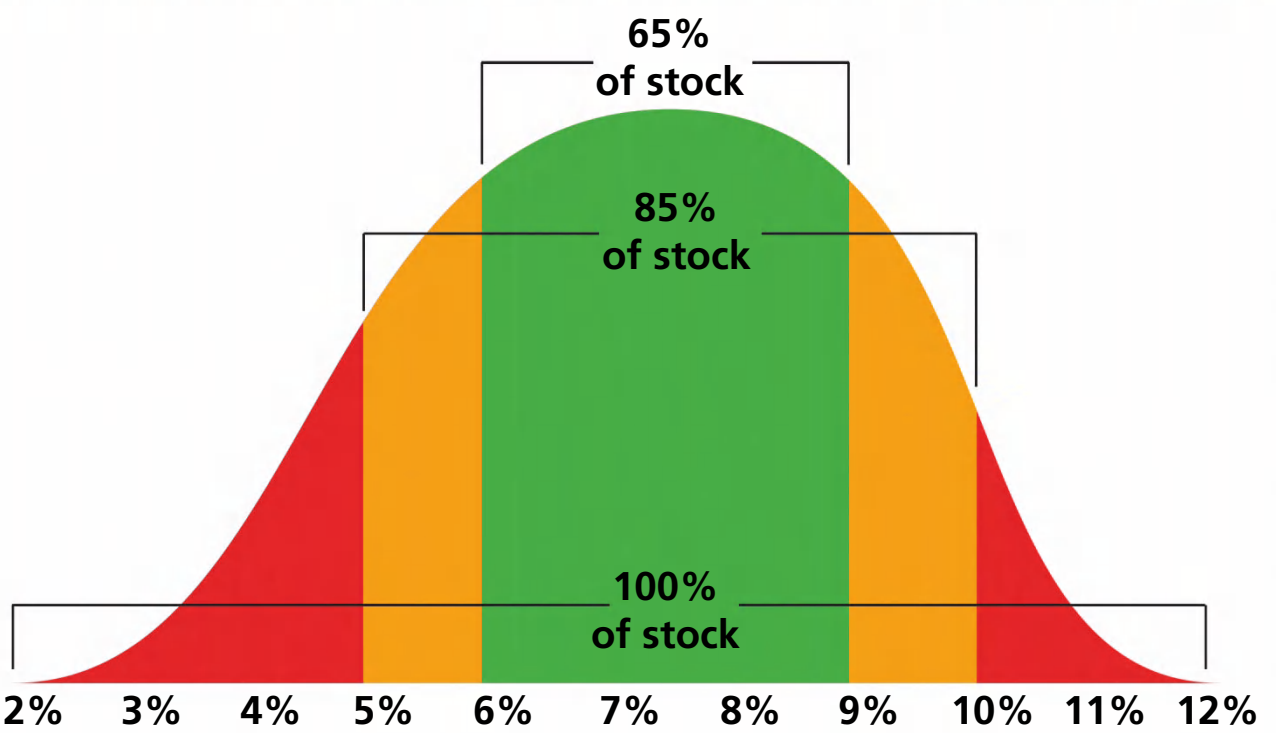


Illustrations: Bob Zimmerman

## PINLESS METERS

In contrast to their pinned cousins, pinless meters do not have pins to measure moisture. Instead, they rely on taking a reading through a sensor pad that is usually located on the back of the meter.

They measure moisture by transmitting an electromagnetic wave and then reading the electrical impedance within the magnetic field. This is done by setting the moisture meter to the specific density of the wood you're measuring. You can see this in the lower illustration on the next page.

▲ Scanning meters need a clean, flat surface in order to take a reading. Simply plane down a section of rough sawn stock to clean fresh wood.

**MY PREFERRED METER.** Pinless (sometimes called scanning) meters are available in a wide range of price points. They are my preferred style for taking moisture readings for a couple of reasons.

First, I find that they tend to be more accurate. The chemical composition of the tree doesn't affect the moisture reading, and higher end models compensate for temperature as well.

Second, I find they're faster to use. You can even use them on a finished piece of furniture without leaving telltale pin holes.

**DR. METER.** My first scanning meter was the *Dr. Meter* shown above. It runs about $50 and has 10 programmed settings for different wood species.

**ACCURACY.** *Dr. Meter* claims that their scanning model will measure moisture content between 4-80%, with a variance of +/-1.5%. The meter comes with a carrying case as well as a reference chart for the preset densities.

The *Dr. Meter* is a passable moisture meter for most woodworking needs. However, with only 10 preset densities, there's quite a bit of room for inaccuracy. Not to fear, there are more accurate meters available.

**WAGNER'S ORION LINE.** *Wagner* has long been a respected name in the moisture meter industry. Two of their most popular models are shown here — the *Orion 910* (lower photo) and the professional-grade *Orion 950* (photo on the next page). When I started digging into the *Orion* line of moisture meters, I discovered some features that I really found useful.

**CALIBRATION.** All of the *Orion* line of meters come in a plastic carrying case, equipped with a calibration platform. This high-density plastic platform basically allows you to zero out your meter to achieve an accurate reading every time.

In addition to calibration, the *Orion* line of meters compensates for ambient air temperature and moisture and can be set for densities ranging from a specific gravity of .2 up to 1. This means you'll get an accurate reading for every species from balsa to lignum vitae.

**THE 910.** *Wagner's* consumer-grade meter, the 910, reads moisture up to a depth of ¾". The 910 also features what *Wagner* calls *IntelliSense* technology. In short, this allows the meter to ignore light surface moisture and measure deeper in the wood. This means a piece of wood that was just rained on won't give a false reading because of the surface moisture. (It may read a touch

▲ After calibrating, the Orion 910 reads the moisture on this walnut at nearly 7%. That's 2.5 percentage points higher than the lower cost *Dr. Meter* version shown above.

higher, but not drastically like other meters).

For every day workshop needs, the 910 fits the bill perfectly. It's more expensive than other models, coming in at about $379, but you're paying for accuracy.

**PROFESSIONAL GRADE 950.** If you want just a little more from your meter, the next step up from the 910 is the *Orion* 950. It's a professional-grade meter that can read two different depths — ¼" and ¾". Not only does it have all the functions that the 910 has, but it has a few more bells and whistles that the tech nerd in me loves.

**BLUETOOTH.** You read that right — the 950 is bluetooth enabled to hook up with a smart phone. This means that the 950 can take measurements and chart moisture over an extended period of time. This isn't something that most of us would use every day, but if you're drying lumber on a large scale, or like to provide documentation to clients on the material you use when building furniture, it's valuable.

**EQUILIBRIUM MOISTURE CONTENT.** As much as I like the bluetooth feature, there's one single feature of the 950 that would push me to make the investment and purchase one (it sells for $579). And that is the equilibrium moisture content mode. In this mode, the 950 will measure the temperature and moisture in a room and calculate at what moisture percentage a piece of stock will stabilize at. This allows you to know when a board has fully acclimated to its environment, and won't continue to lose or gain moisture.

**MOISTURE METERS IN YOUR SHOP.** Moisture meters may not be the big, cool tool that everyone dreams of when they're planning purchases for their shop. However, a quality project starts with the material that you're using. And making sure that stock is dry, acclimated, and ready to use lays an important foundation for you to be successful.

So, if you don't have a moisture meter on hand, use this information to select one that suits your needs. For retail information for all of these meters, check out Sources on page 66. W

▲ The scanning meters from *Wagner* come as a kit. It includes the meter, carrying case, reference charts for wood species, and a high density plastic calibration platform for on-site zeroing of the moisture meter.

**Scanning Depth.** Scanning meters work by transmitting an electromagnetic field to a set depth in the stock. Combining a user-set density with the magnetic field reading, the meter can calculate how much moisture is present in the wood. Scanning meters are unaffected by chemical composition of the stock, instead only relying on the specific density, which is relatively uniform across different trees of the same species.

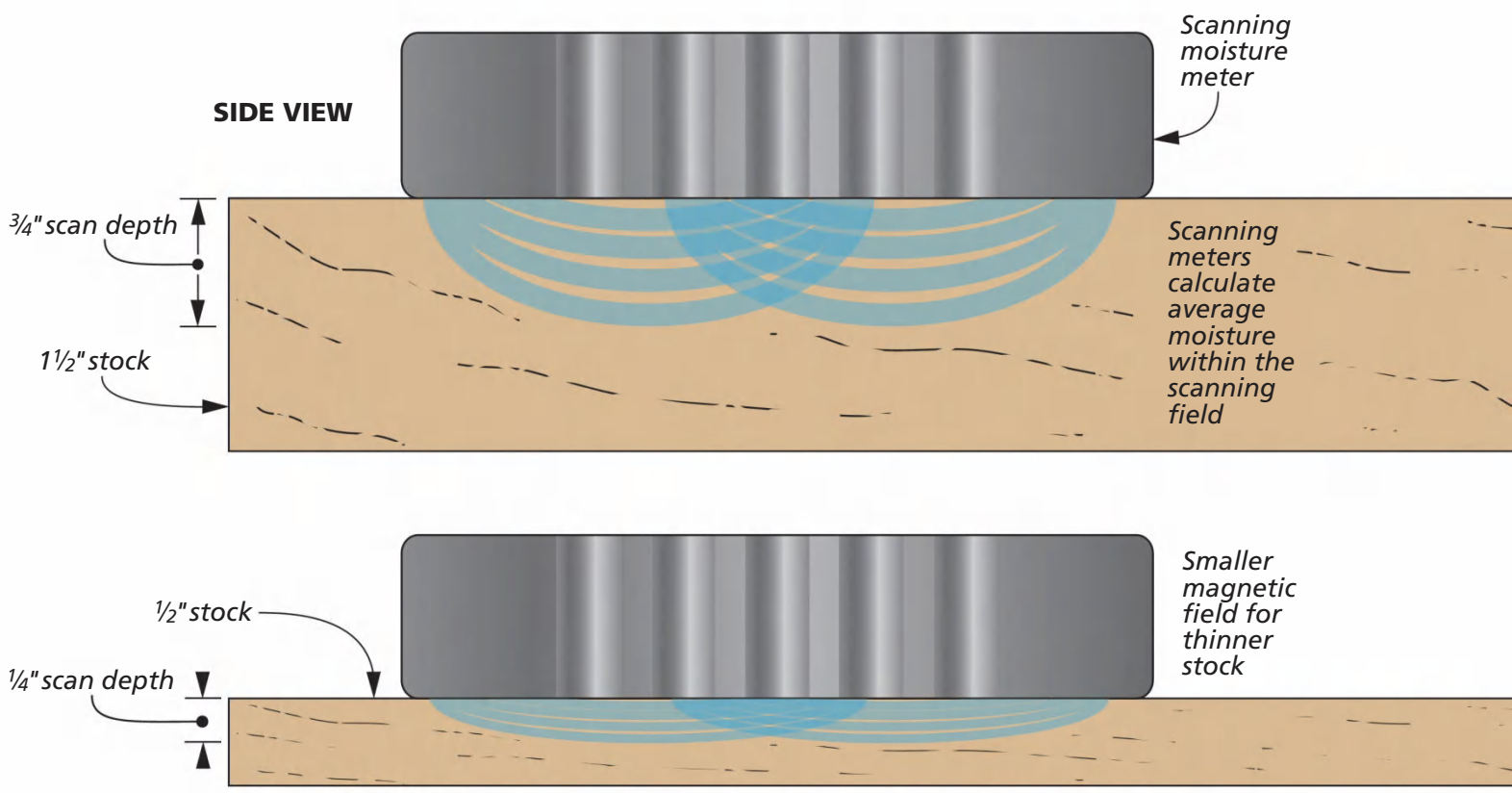

Written by: Phil Huber; Project Design: Chris Fitch

▲ The tree pattern channels liquids down into the deeper perimeter groove to prevent spills. Router templates and guide bushings simplify the process of creating the stepped cuts.

# Carving Board

More than just a cutting board, this project adds a routed, decorative design that serves a practical purpose, as well.

For a woodworking project, cutting boards carry a lot of appeal. You can make one (or more) in a short amount of time. A cutting board requires little wood — often you can use scraps from other projects. And the skills necessary to make one fall within the realm of beginners.

For all that simplicity though, cutting boards are fertile ground for improvisation and customization. There are even online communities dedicated to the subject. And they make great gifts. What more could you ask for?

**SKILLBUILDER.** As a woodworker, it can be fun to whip out a few cutting boards for gifts. But I also enjoy making a cutting board to try out a new skill, material, or style. And that's what I've done here.

This project takes the form of a "carving board" because it incorporates grooves to contain the juices released when cutting fruits, vegetables, and meats. To take things further, I wanted to add something beyond a basic perimeter groove. Our Creative Director, Chris, came up with a tree-of-life motif that reminds me of Shaker designs … or Lord of the Rings. The pattern is formed with some fun router work. The depth of the grooves steps down from branches, to trunk, to perimeter in order to channel liquids. The leaves are also "carved" with a router too.

So while this all is done in the name of serving a practical purpose, the main goal of this carving board is to provide a woodworker with a good reason to step into the shop and use some tools.

Illustrations by: Becky Kralicek

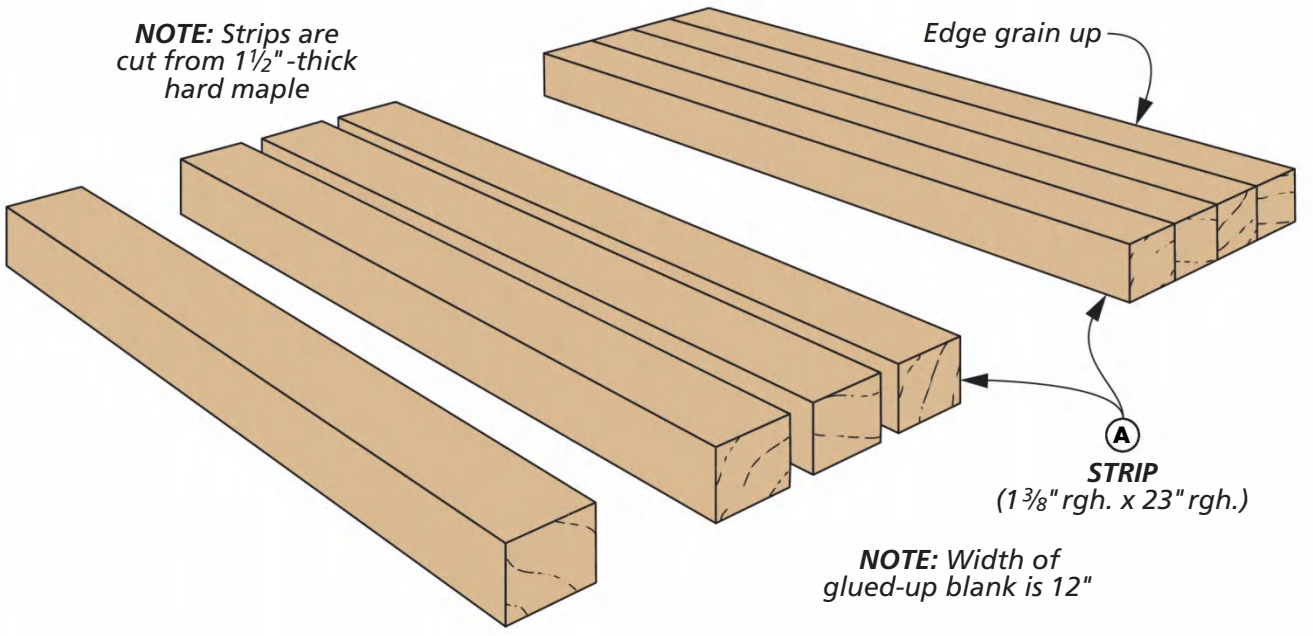


## Glue & SHAPE

While the tree carving attracts your attention, the starting point is gluing up a panel. This is also an easy step to breeze through.

I think it pays to pause and consider the look of the panel and how it can work in your favor. You may be thinking, "It's just a carving board." However, making a smart-looking small panel applies to larger panels for furniture.

**EDGE GRAIN.** In order to create a more durable carving board, this board consists of a panel of "edge grain" hard maple strips. This structure is tougher than the flatsawn face found on typical boards you find at the lumberyard or home center. As a side benefit, the edges have tight, straight grain lines that create a more uniform surface.

Getting edge grain faces starts with cutting a wide, 1½"-thick board into strips. The strips are cut several inches longer to allow you to trim away any planer snipe created during the flattening process.

Turning these strips 90° reveals the edge grain. I used eight strips in the carving board so that there would be a glueline right down the center, as shown in the left drawing. The idea is to keep the strips symmetrical.

The final thickness of the carving board is 1¼". I cut the strips slightly wider (about 1⅜") so there would be some wiggle room to plane the panel flat without it getting too thin.

Spend a little time now to arrange the strips into a sequence that looks good to your eye. Then it's time to get out the glue bottle and clamps.

**GLUING UP.** On a project like this, I've found that gluing up the board in several stages makes the process easier. This way, you only need to manage two or three glue lines to get them flat and aligned once the glue goes on and the clamps are applied.

After gluing up the board in halves, I passed each half through a thickness planer to level the joints. Then the halves are glued together into a single blank. A final pass through the planer on each side results in a smooth surface that's ready for some shaping.

**THROW A CURVE.** The ends of the carving board are curved to relieve the monotony of a rectangular slab. Lay out the curve on each end and cut it to shape at the band saw, as shown in the box to the left.

Band saws excel at cutting curves, and with practice you can get a pretty smooth result. However, there's always going to be some cleanup necessary. While I enjoy using hand tools, power tools are my preferred choice when dealing with hard maple end grain. A disc or edge sander speeds the process of working down to the layout lines. From there, hand sanding will get you to a smooth, nearly polished surface.

### CUTTING CURVES

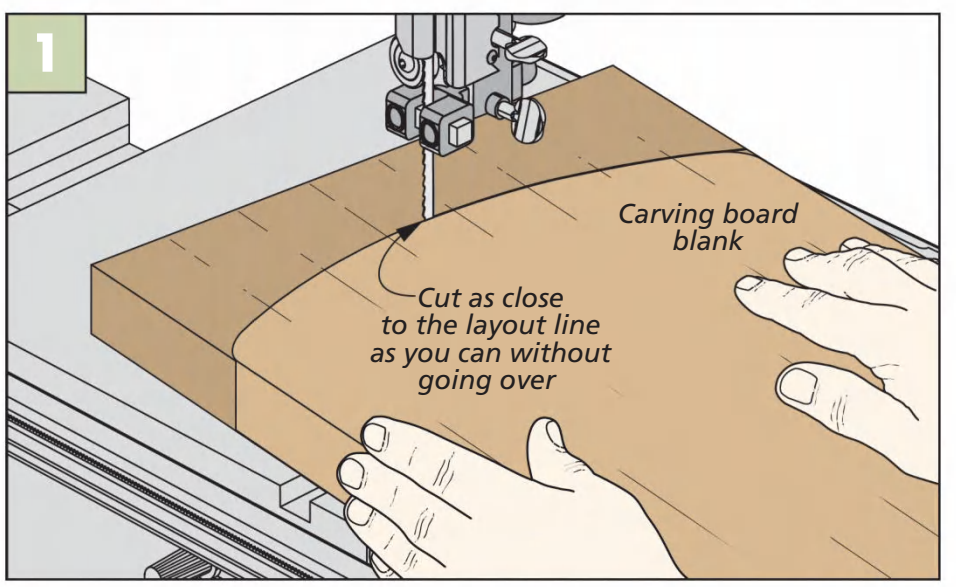


**Curve at the Ends.** When making cuts like this at the band saw, cut close to, but just outside, the lines. This way, you can sand up to the line for a smooth, flowing curve.

## THE JUICE GROOVE

The next order of business is to create the main juice groove around the edge of the carving board. It's a task that's ideally suited for a router.

**TEMPLATE SYSTEM.** The first issue to address is how to guide the router while making the groove match the shape of the board. To help me get reliable results, I employed a two-part template. The main template wraps around the outside edge of the carving board and overlaps the top to create an offset in order to guide the router.

This part of the template has a double-layer construction. The bottom layer fits snugly around the carving board. I traced the carving board onto a piece of ½" MDF. Then I cut the shape at the band saw. Using the band saw leaves an open kerf where you start the cut, but it doesn't affect the usefulness. Sand the inside shape so the MDF just slips over the board with a press fit.

On top of this goes a second layer of ½" MDF. This one has an opening that's inset from the edge. You can lay this out yourself. Or you can use the patterns online at *Woodsmith.com* to create the opening.

I used the same band saw method to cut this opening. It cuts faster and I can get more reliable cuts using the band saw than a jig saw. When the two layers are glued together, the templates will be rigid, providing the band saw kerfs aren't right on top of each other. This is an easy situation to avoid. File and sand working up the to the lay out lines as any inconsistencies will get transferred to the groove.

**INNER TEMPLATE.** The second part of the process is to create an inner template. This one constrains the router from drifting into the field of the carving board. The size of this template creates a gap 1 1/16" wide. While you're at it, make two more inner template blanks. These will be used to form the tree shape.

**ROUTING THE GROOVE.** The groove is routed using a plunge router, a 1" guide bushing and a ¾" core box bit, as in the box below. I made spacers to locate the inner template, which is attached with double-sided tape. Rout the groove in two passes. On one pass, the guide bushing follows the outer template. For the second pass, hold the bushing against the inner template. (Note that you'll change directions to avoid back routing.)

Maple burns easily. So rout the groove in several, progressively deeper cuts. Reducing the speed of your router can help to minimize burning, as well.

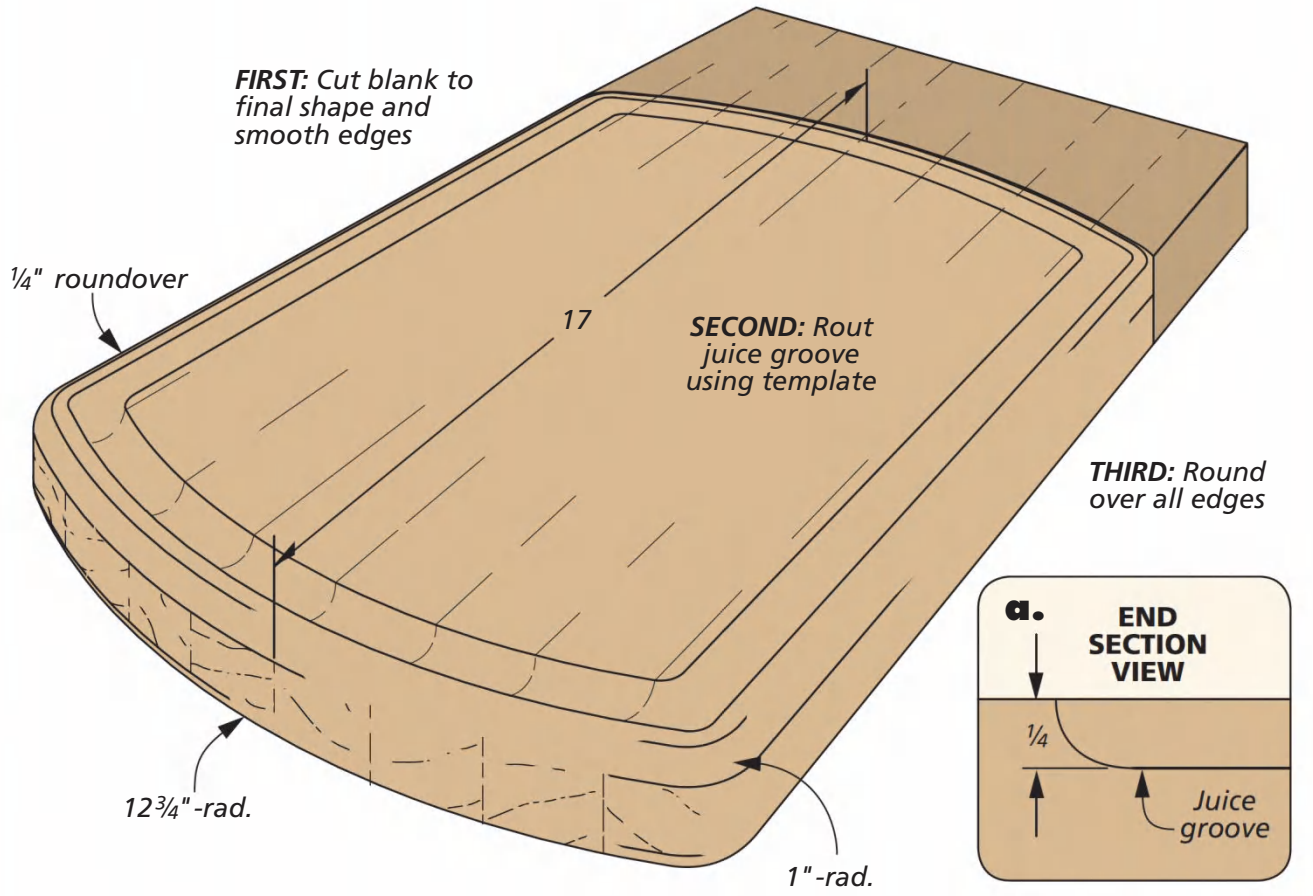


Woodsmith GO ONLINE EXTRAS

For all the template patterns and jig drawings, go to Woodsmith.com/248

## JUICE GROOVE

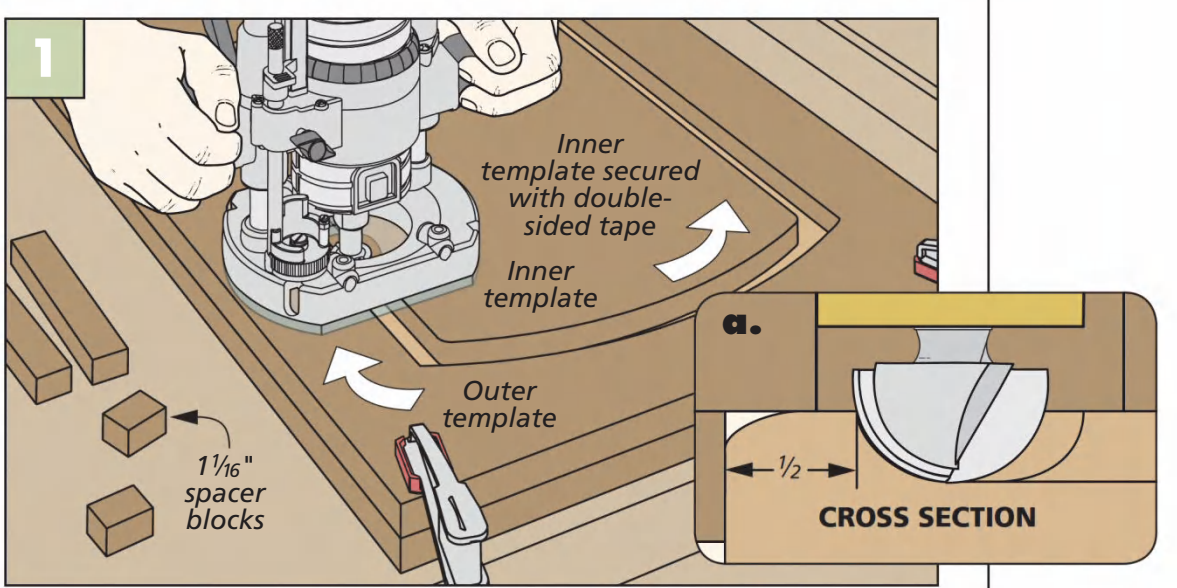


**Routing.** Move the router clockwise when following the outer template and counter-clockwise when following the inner. Form the groove in several sets of passes, lowering the bit each time.

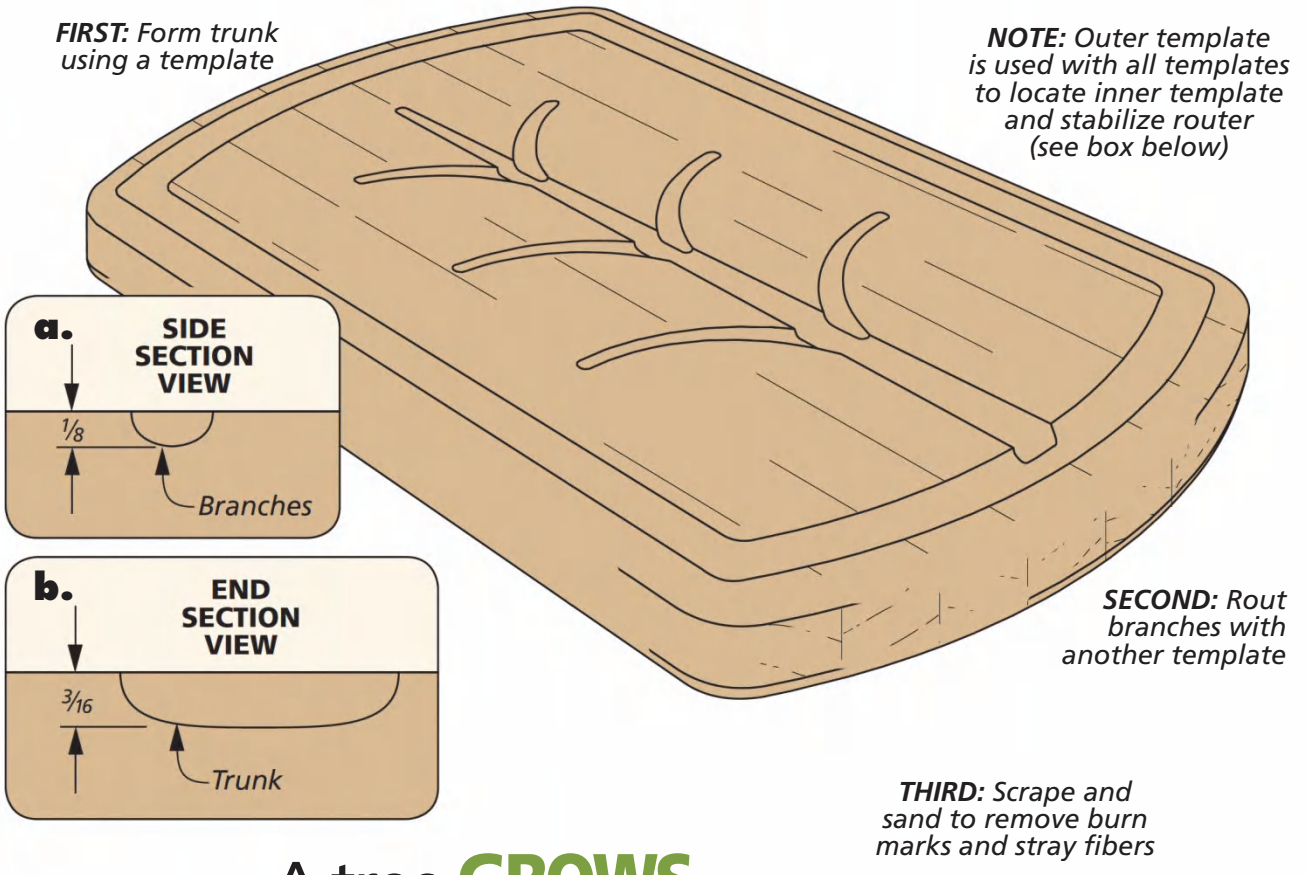


## A tree **GROWS**

This is where the fun really begins. A carving board with a perimeter juice groove is nothing new. Creating a tree-shaped pattern to go with it gives this project its unique look.

What isn't necessarily apparent is how the tree and outer groove work together. As you know by now, the outer groove is ¼" deep. The trunk of the tree is 3/16" deep and the branches are just ⅛". This stepping down creates a drain board effect where juices flow from the tree into the groove to contain the mess.

**THREE PARTS.** To go along with the varying depths, shaping the tree takes three distinct steps: the trunk, the branches, and the leaves. For this, we'll follow nature and work from the ground up.

Earlier, I suggested making two more inner template blanks. It's time to get them out. One will be used for making the trunk, the other for the branches.

Using the online patterns, trace or glue down the trunk pattern onto the template blank. Drill out the end, then cut the sides using the band saw. Smooth the edges of the trunk with files and sandpaper. Remember, any inconsistencies will be transferred to the carving board.

**SETUP & ROUTING.** With the outer template still in place, use the spacers to center the trunk template. Attach it with double-sided tape (Figure 1).

I switched the bit and the guide bushing at this point. For both the trunk and the branches, I used a ⅛"-radius core box bit housed in a 7/16" guide bushing.

Rout the trunk in two passes. A heavy pass to remove most of the waste. Then a light (1/16" or less) pass to clean up any burning. I followed the template defining the trunk shape. The wider spots call for back-and-forth passes to clear out the remaining material. Take your time in order to get the surface at the bottom as smooth as possible.

**BRANCHES.** Figure 2 shows the same process to form another template and rout the three

## ROUTING THE TREE

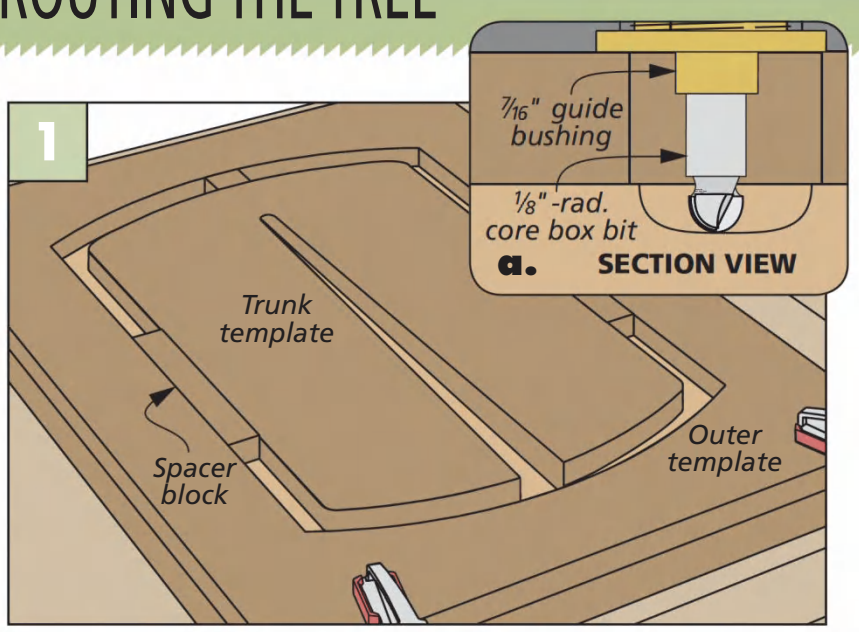


**First the Trunk.** Replace the blank inner template with the trunk template. Here again, use the spacer blocks to center the template. Double-sided tape holds it to the board.

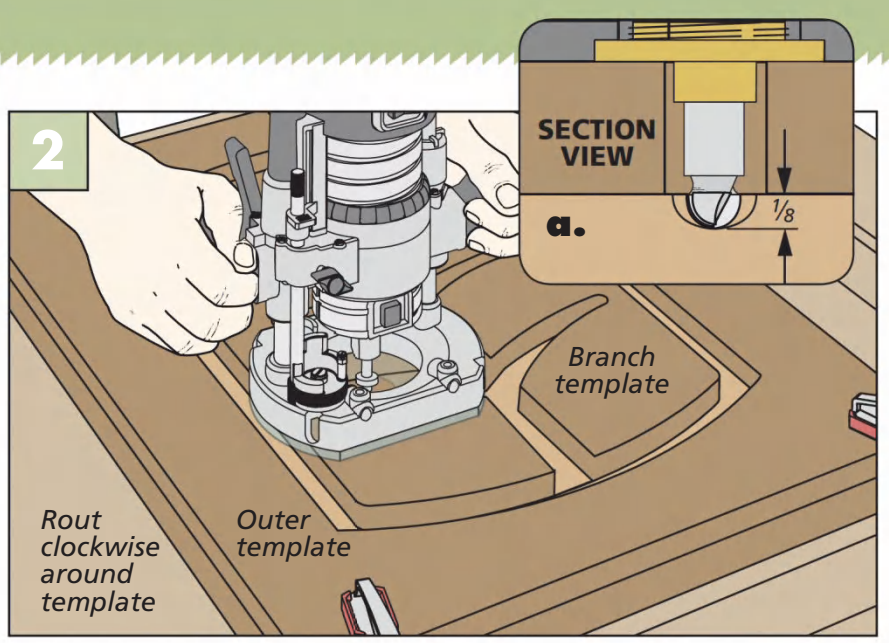


**Then the Branches.** Using the branch template should be pretty familiar by now. Trace around the edge then clean out the waste where the branch and trunk meet.

branches on either side of the trunk. Remember that the branches are only ⅛" deep, so rout them in two passes.

With such a narrow bit, it can be tough to get the bottom of the trunk groove perfectly smooth. I made a narrow scraper from a piece of a card scraper. I rounded the edges to match the bit and used it to clean up any stray lumps and bumps. A router plane or sandpaper wrapped around a short piece of wood will work, as well.

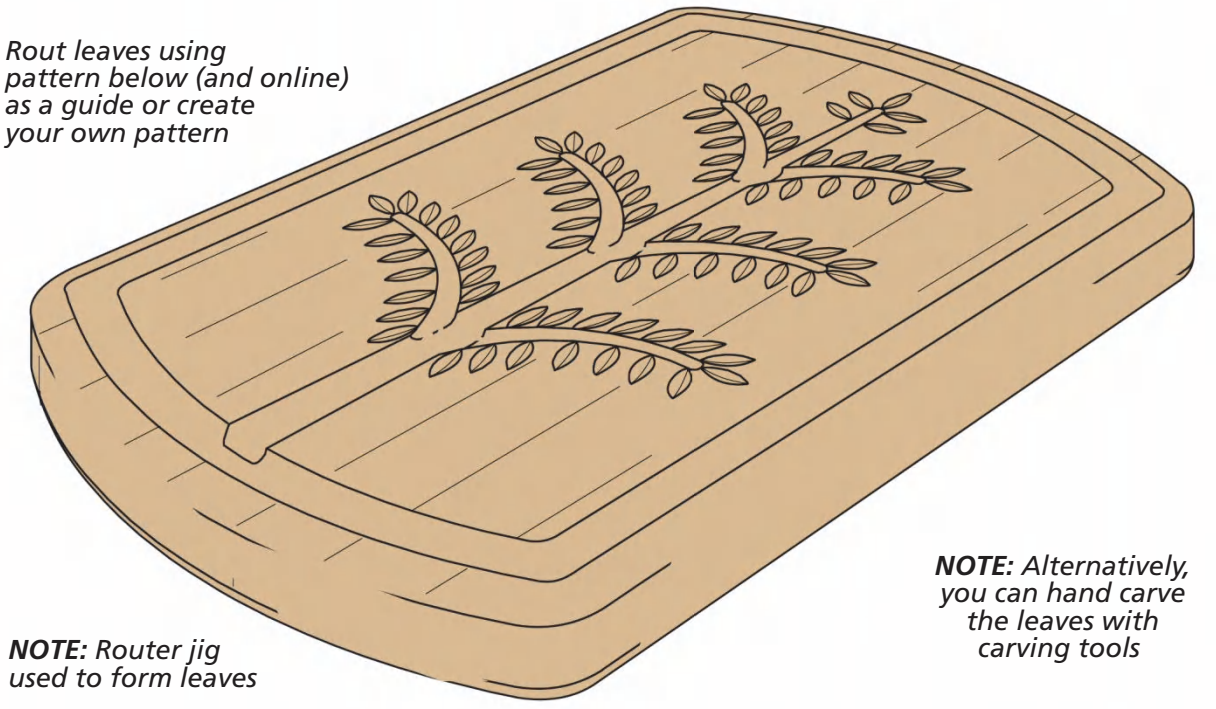


## CARVE SOME LEAVES

A tree without leaves is called winter. So the final step is to add some leaves to the branches (drawing above). For those who are inclined to carve, you can do this with a V-gouge. On hard maple, a sharp tool and steady hand are required.

**MAKE A JIG.** Since we've been putting the router to use so far, why not take it all the way? But rather than a template, you can use a clever jig to hold the router and guide it through the cut.

The point is to carve the leaves, not spend a lot of time making a jig. So this one is pretty simple. As you can see in Figure 1 below, it consists of an acrylic base with a pair of hardwood brackets. Two sides sandwich a pair of blocks that hold the router motor. One block is glued and screwed to the sides, the other is attached to the fixed block with carriage bolts, washers, and nuts. Size a cutout in the blocks to match the motor of your router.

**ROUTING LEAVES.** The jig uses a 120° V-groove bit to shape the leaves. Set the bit so that it extends 1/16" beyond the base. The clear acrylic base lets you position the jig right where you want. You can use the pattern below (and online) as a guide or make up your own design. With the bit away from the surface, turn on the router then pivot the bit down and through the base to form each leaf.

After a final sanding, the carving board is ready for finish. Then it can take pride of place at your next feast. W

## JIG FOR LEAVES

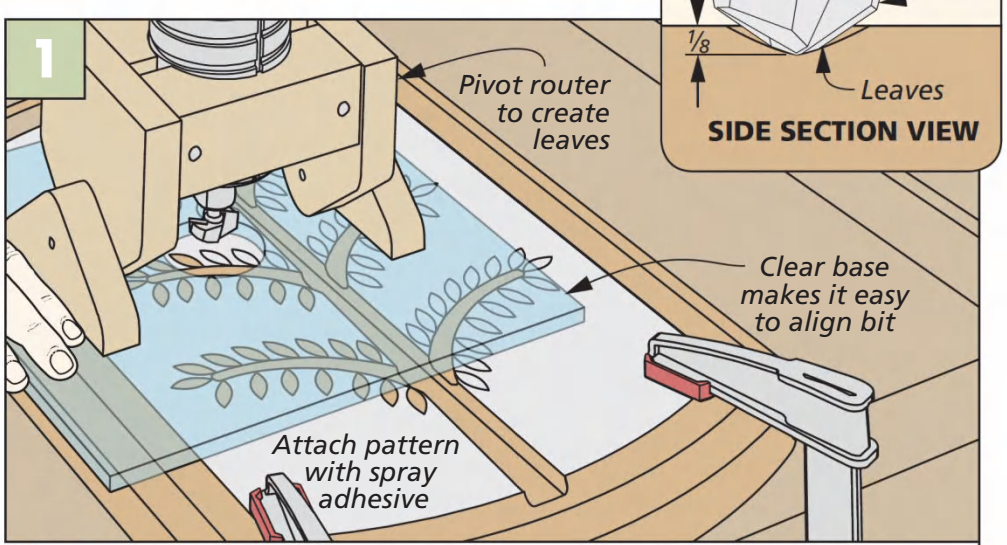


**Jig for Leaves.** A simple, pivoting router jig guides a V-groove bit to create consistent leaves around the branches. A paper pattern secured with spray adhesive helps you line up the jig.

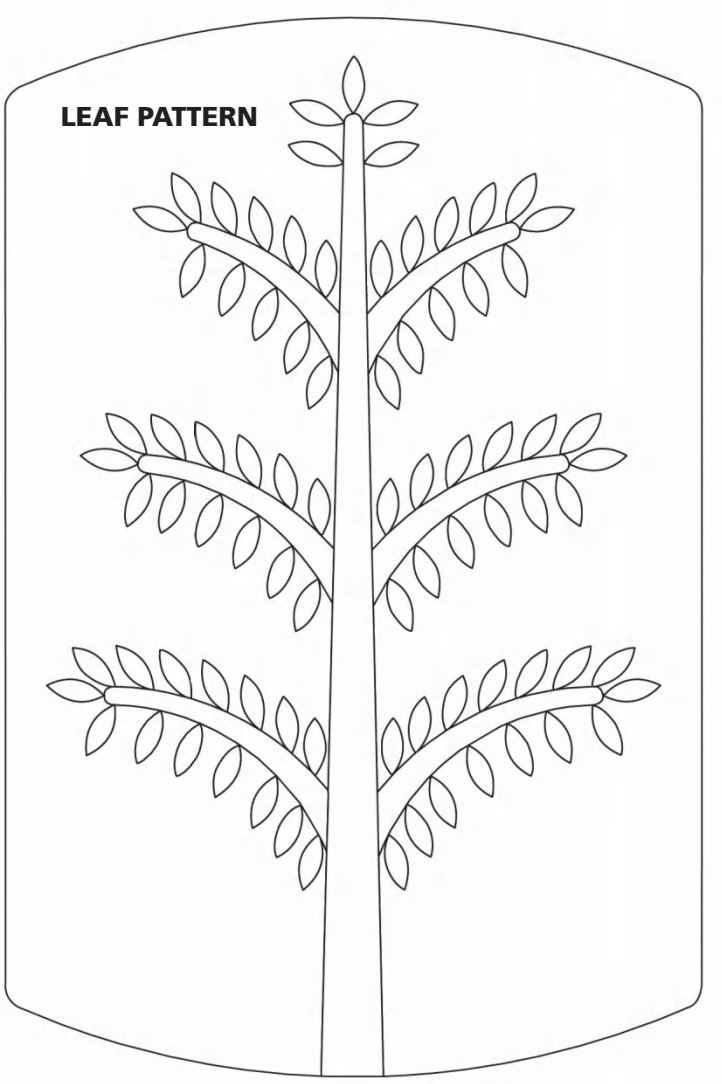

# Miter Saw Station

## This no-nonsense workstation offers all the needed features in a compact, mobile design.

Over the years, we've featured a number of different miter saw stations, some of them taking up an entire wall. The one shown here hits what I consider a sweet spot in terms of size and features. The drop-down wings on either side of the cabinet open out to provide over eight feet of workpiece support. Below the saw is a compartment for a dedicated shop vacuum. And the whole thing is mounted on casters, so it can easily be tucked away when not in use.

**START WITH THE CASE.** With the exception of a couple of parts, this miter saw station is built entirely out of ¾" plywood. The case is an open, plywood box. To build it, I started by cutting the panels for the sides, back, and bottom to size, according to the dimensions shown in the main drawing on the next page.

The case panels are joined using tongue and groove construction. I cut all these joints at the table saw, but you could use a router if you prefer.

▲ With the wings folded down, the miter saw station can easily be rolled across the shop and stored out of the way, until it's needed again.



Written by: Vincent Ancona; Project Design: Chris Fitch

I started by cutting ¼"-wide dadoes near the bottom edge of the side and back panels, as shown in detail 'a.'

Using the same setup, cut a groove along the inside back edge of the two side panels. With that done, you can turn your attention to making the matching tongues on the bottom and back panels.

Burying a dado blade in an auxiliary rip fence allows you to dial in a precise length for the tongues. The tongue thickness is controlled by raising or lowering the blade.

Before gluing up the case, there are a couple of details to take care of. First, I radiused the upper front corners of the side panels. Then I drilled a series of holes in the back panel, as shown in detail 'c.' These holes allow for airflow when using a shop vacuum for dust collection.

**ADD A SHELF.** Once the case is glued up, you can add a shelf. The shelf is nothing more than a piece of plywood sized to fit in the case. It's supported by three cleats that are screwed to the sides and back of the case.

The location of the shelf within the case will depend on the height of the table of your miter saw. The box below will help you determine where to position the cleats and shelf so that your miter saw ends up at the same height as the extension wings that you'll be adding next.

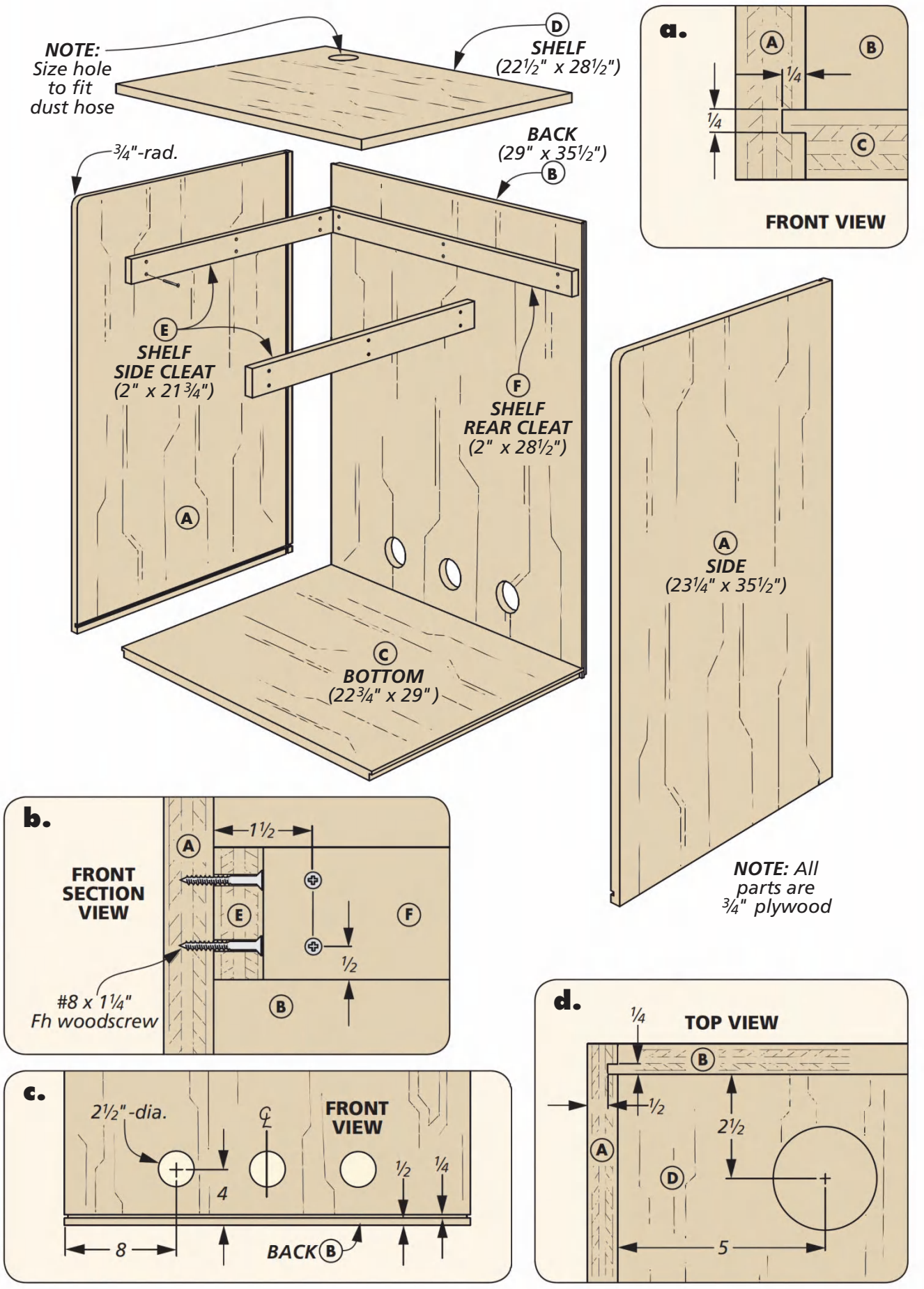


## CLEAT POSITION

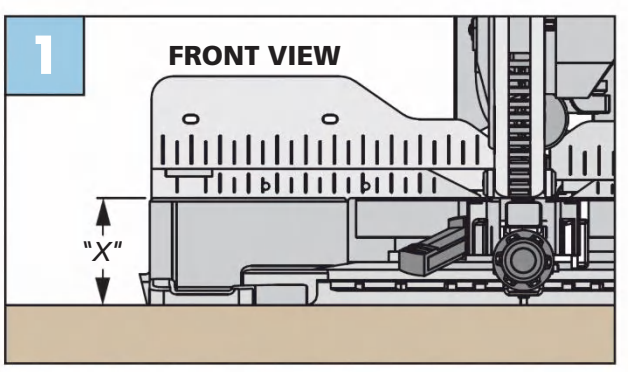


**Mounting Your Miter Saw.** In order to position the cleats for the shelf, start by placing your miter saw on a flat surface and measure the distance to the working surface of the saw, as shown in Figure 1. Then, use this measurement to position the cleats on the case (Figure 2).

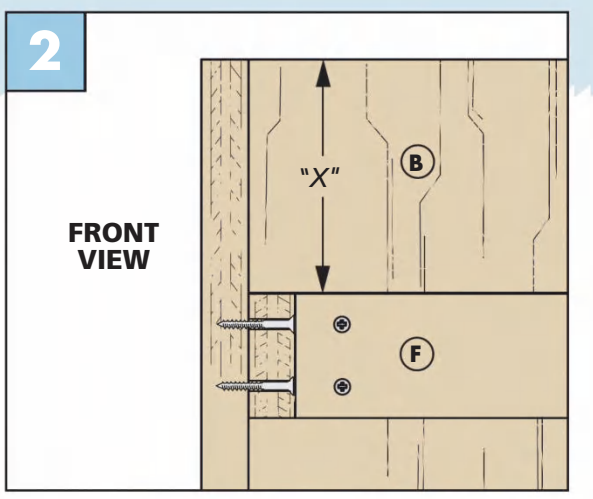


Illustrations: Dirk Ver Steeg

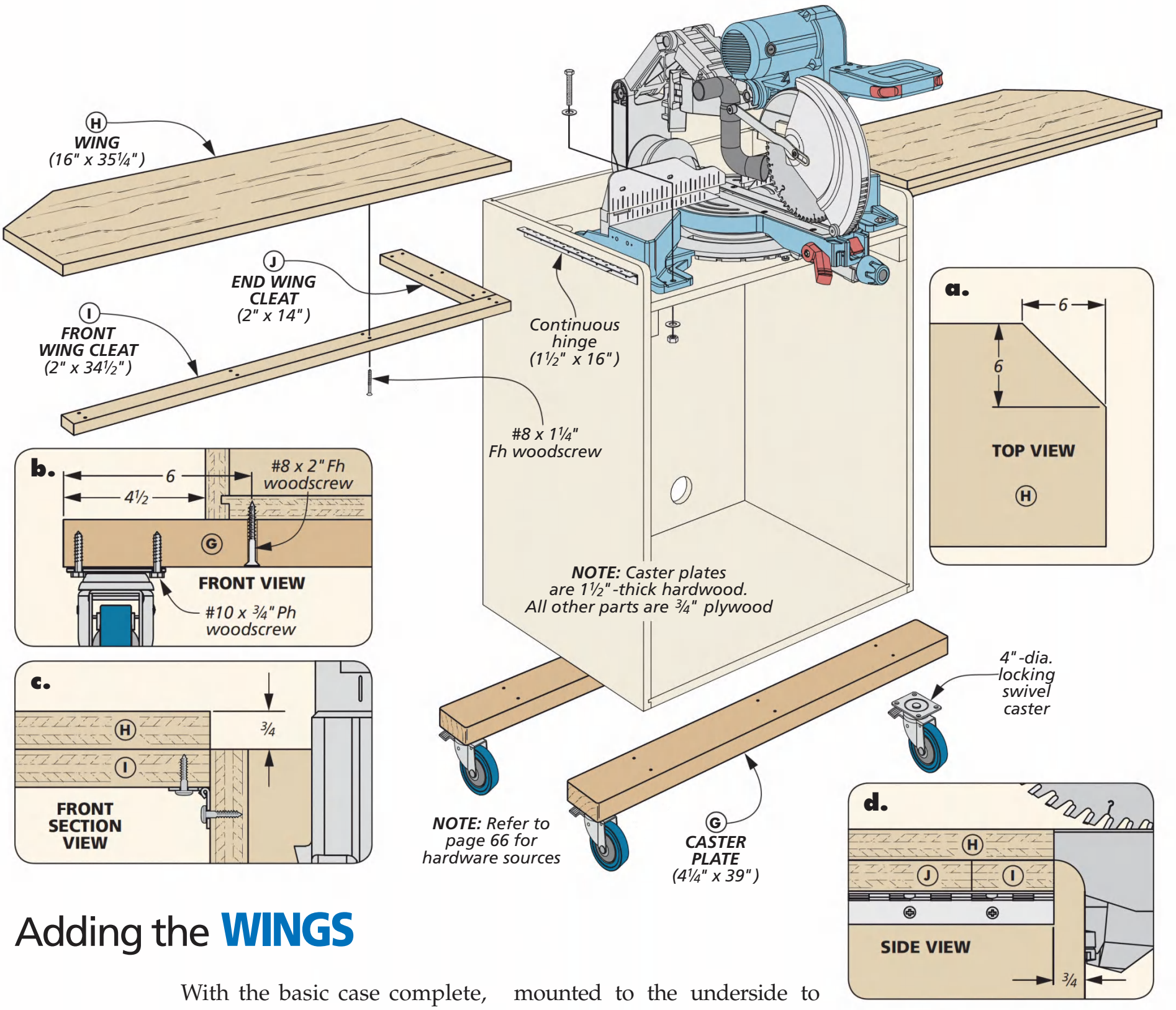


# Adding the **WINGS**

With the basic case complete, the next step is to add the drop-down wings. Before getting started on those, however, I decided to add some casters to the case. This makes it a little easier to move the station around as you're adding the wings.

As you can see in the drawing above, the locking swivel casters are mounted to a pair of caster plates. These are simply a couple pieces of 1½"-thick hardwood. (Or you could make them out of two layers of plywood).

After the casters are mounted, the plates are screwed directly to the bottom of the case (detail 'b'). They're flush at the front and back, and centered from side to side.

**WINGS.** The drop-down wings are made up of a single layer of plywood with a couple of cleats mounted to the underside to add some stiffness. As you can see in detail 'a' above, the outer back corner of each wing is mitered to relieve the sharp corner. Then the cleats are screwed to the bottom of the wing, flush with the end and front edge.

**MOUNTING THE WINGS.** The wings are attached to the sides of the case with continuous hinges. I found it easiest to mount the hinges to the wings first and then to the case. As you can see in details 'c' and 'd,' the goal here is to position the wings so they are flush with the table of the miter saw and set back ¾" from the front edge of the case.

Attaching the wings to the case is probably the trickiest part of this project. The task is much easier if you have a helper to hold each wing as you drive the screws that attach the hinges.

If you're flying solo, you can clamp a long, straight 2x6 to your miter saw so that it overhangs each side, as shown in Figure 1 in the box on the next page. Then clamp the wing to the 2x6 to hold it in position while you screw the hinge to the side of the case.

### HINGED WING SUPPORTS

In order to hold the wings up, I added a couple of wing supports, as shown in the main drawing on the next page. These work similar to the supports on a drop-leaf table. You simply lift up the wing and then swing the support out to prop up the wing.

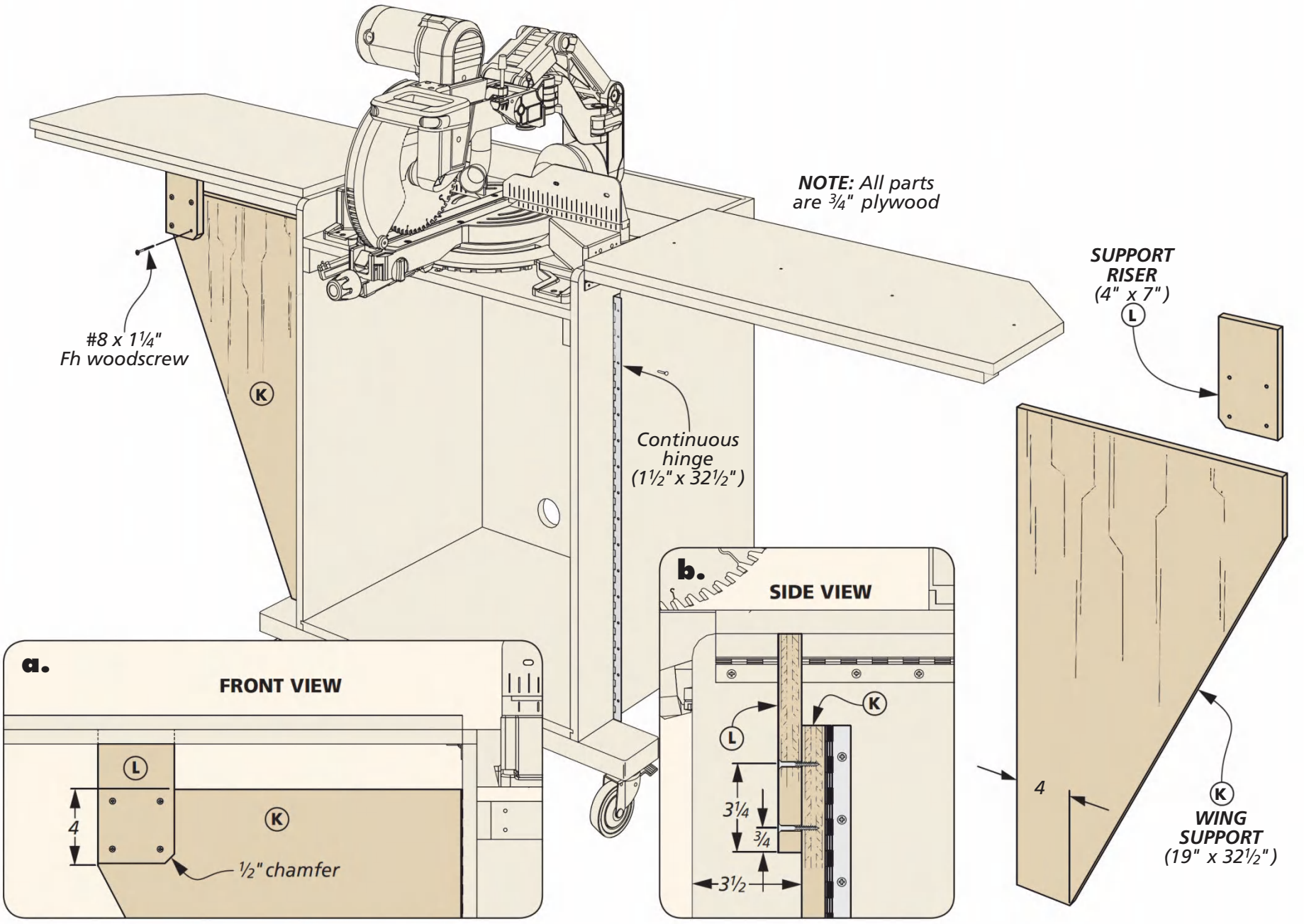


The supports are made up of two pieces — a support panel and a small riser. The support panels are cut to overall size first. Then to keep the weight down, I cut a large taper on one edge at the band saw.

The risers are cut to size next and drilled for mounting screws. Note the chamfer on the lower inside corner (detail 'a').

**ATTACHING THE SUPPORTS.** Like the wings, the supports are attached with continuous hinges. The goal here is to position the supports so that when they are swung open 90°, the riser will hit the back edge of the cleat on the wing, as shown in detail 'b' above. (The risers are not attached at this point.) The end of the support should be flush with the lower edge of the case.

Once the supports are hinged to the case, you can screw the risers in place. Figure 2 in the box below shows this being done.

## ATTACHING THE SUPPORTS

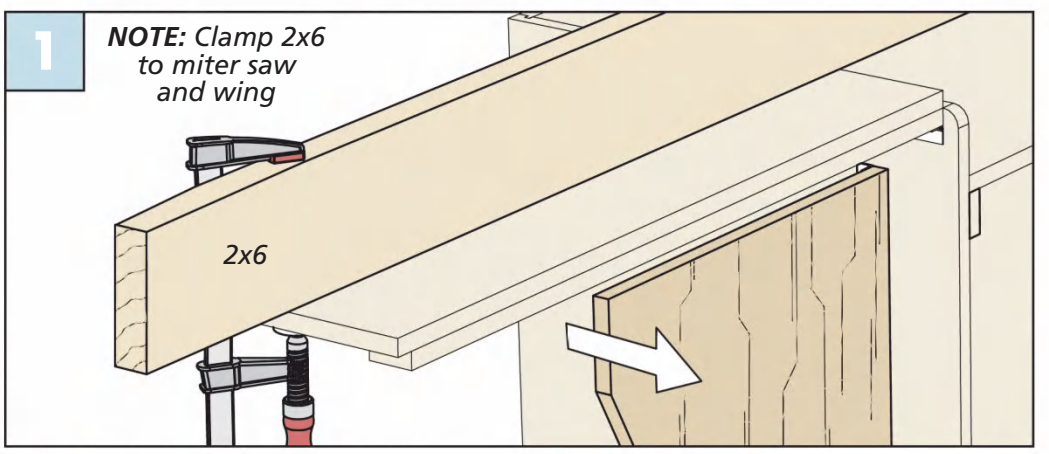


**Mounting the Supports.** To hold the wings up while mounting the supports, clamp a long, straight 2x6 across the miter saw. Then clamp the wings to the 2x6 and screw the support hinges to the case.

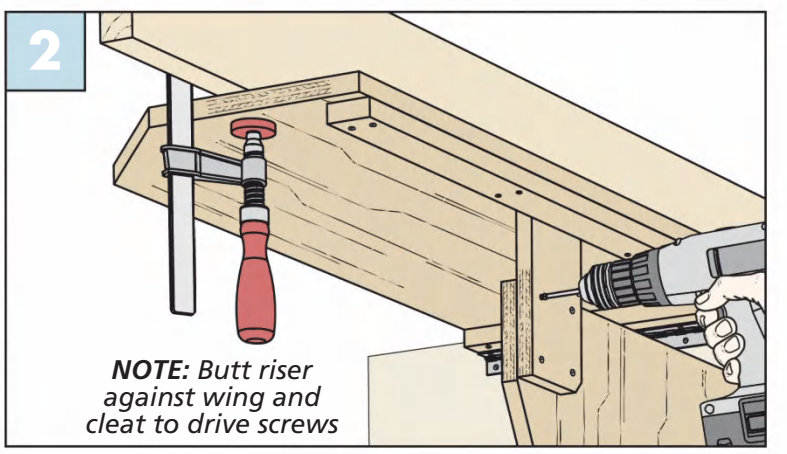


**Risers.** Position the riser so it contacts the bottom of the wing and butts up against the back edge of the cleat. Then screw it in place to the support.

NOTE: Attach miter saw to workstation with lag screws

M FENCE (2½" x 35¼")

#8 x 1½" Fh woodscrew

4

2

NOTE: Door length may vary based on position of shelf due to saw height

Magnetic catch

Continuous hinge (1½" x 32½")

NOTE: All parts are ¾" plywood

Strike plate

Door pull

N DOOR (14 15/16" x 32½")

a. TOP VIEW

M

NOTE: Position fence flush and parallel with miter saw fence

b. TOP VIEW

A

⅛" roundover

N

## FENCE ALIGN

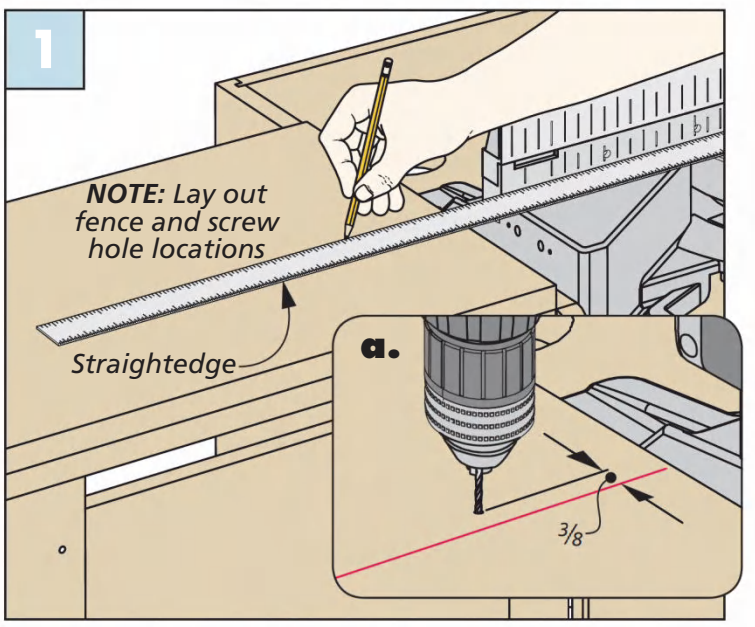


**Aligning the Fences.** Place a straightedge against the fence of your miter saw to lay out the locations of the fences and the screw holes.

# Completing the **STATION**

At this point, there are only a couple of finishing touches left to complete the miter saw station — a pair of fences for the wings and a pair of doors for the case. I started with the fences.

As you can see in the drawing above, the fences really couldn't be any simpler. Each one is just a strip of plywood that is screwed directly to the wing.

With the fences cut to size, the next step is to lay out the mounting holes on the wings. Start by attaching your miter saw securely to the cabinet with lag screws. Next, use a straightedge and rule to mark out the locations for the fences and corresponding screw holes, just as you see in the box at left.

After drilling and countersinking the screw holes, the fences can be clamped to the wings and then screwed in place. Again, you'll want to use a straightedge as you're positioning the fences to make sure that they're perfectly aligned with your saw.

**ADDING THE DOORS.** Not wanting to break with tradition, the doors for the miter saw station are also just two simple plywood panels. But I need to mention something about their length. The doors are sized so that they end up flush with the top of the shelf and the bottom of the case.

Depending on where you located the shelf for your particular miter saw, you may have to make the doors slightly shorter or longer than the dimensions given in the main drawing.

Once you've determined the length for your doors and cut them to size, you can rout a roundover on the front edges. Then mount the doors to the front of the case with continuous hinges, (detail 'b' on previous page).

**DOOR HARDWARE.** The final steps to complete the doors are to add a pair of pulls and a set of magnetic catches at the top and bottom of each door. These will prevent the doors from swinging open as you roll the station around your shop.

**FINISH.** I finished the project with two coats of spray lacquer. You'll have to remove the miter saw in order to apply the finish, so just make sure to align the saw with the fences when you bolt it back down.

The last step, should you choose to do so, is to mount a shop vacuum inside the cabinet. A vacuum may not capture all the dust from the saw, but it helps a great deal.

The cabinet enclosure helps to keep the noise from the shop vacuum down. (But unfortunately, it doesn't do anything for the noise from the saw itself.)

I really like the simple functionality of this miter saw station. While it may not have a ton of bells and whistles, I think you'll find that it's a practical addition to any shop. W

▲ The compartment below the saw is large enough to house a shop vacuum. The hose for the vacuum passes through the hole in the shelf to connect to the saw.

▲ With the wings folded down, the swivel casters allow you to easily maneuver the miter saw station into a corner of your shop, until the next time you need it.

## Materials, Supplies & Cutting Diagram

| | | |
|---|---|---|
| **A** | Sides (2) | ¾ ply. - 23¼ x 35½ |
| **B** | Back (1) | ¾ ply. - 29 x 35½ |
| **C** | Bottom (1) | ¾ ply. - 22¾ x 29 |
| **D** | Shelf (1) | ¾ ply. - 22½ x 28½ |
| **E** | Side Shelf Cleats (2) | ¾ ply. - 2 x 21¾ |
| **F** | Rear Shelf Cleat (1) | ¾ ply. - 2 x 28½ |
| **G** | Caster Plates (2) | 1½ x 4¼ - 39 |
| **H** | Wings (2) | ¾ ply. - 16 x 35¼ |
| **I** | Front Wing Cleats (2) | ¾ ply. - 2 x 34½ |
| **J** | End Wing Cleats (2) | ¾ ply. - 2 x 14 |
| **K** | Wing Supports (2) | ¾ ply. - 19 x 32½ |
| **L** | Support Risers (2) | ¾ ply. - 4 x 7 |
| **M** | Fences (2) | ¾ ply. - 2½ x 35¼ |
| **N** | Doors (2) | ¾ ply. - 14 15/16 x 32½ |

- (54) #8 x 1¼" Fh Woodscrews
- (12) #8 x 1½" Fh Woodscrews
- (12) #8 x 2" Fh Woodscrews
- (16) #10 x ¾" Ph woodscrews
- (4) 4"-dia. Locking Swivel Casters
- (5) 1½" x 36" Continuous Hinges
- (2) Pull Handles w/Screws
- (4) Magnetic Latches w/Screws

*1½" x 4½" - 84" Hard Maple (3.9 Bd. Ft.)*

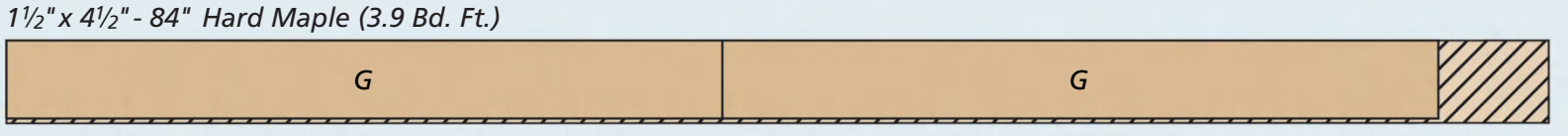


***ALSO NEEDED:*** *Three 48" x 96" sheets of ¾" birch plywood*

# DESIGNER Project

Written & Illustrated by: Erich Lage

# Turntable Console

This console gives a big warm hug to that classic entertainment vehicle — the turntable. It also provides dignified accommodations for your albums and speakers.

The saying "what's old is new again" was never truer than when it comes to vinyl records. Having watched this method of musical entertainment get slowly buried over the last five decades by 8-tracks, cassettes, *Walkmans*, CDs, and streaming made me think that they were gone for good.

But apparently, vinyl records have brushed off all attacks as "merely a flesh wound." Such resiliency deserves to be celebrated — and the console you see here is worthy of paying homage to the vinyl renaissance.

The case is built from no-nonsense, 1"-thick solid mahogany panels that are mitered at the corners with splines for a strong joint. You can't see these details because of the thick edging that is glued to the front. The edging has a large roundover that winks at the mid-century design tastes of the late 40s and 50s.

A bin that stores your albums is securely hinged to the case, giving you access to your collection when you need it, then hiding it away otherwise. To complete the look and utility of the console, the same hinge system is used on the cover of the turntable.

Behind those attractive speaker covers you'll find ample room for your personal set. The best place to start is the case of the console, so turn the page and get after it.

Just to the left of the turntable is the album bin. It tilts out to keeps your favorite platters close at hand.

Project Design: Dillon Baker

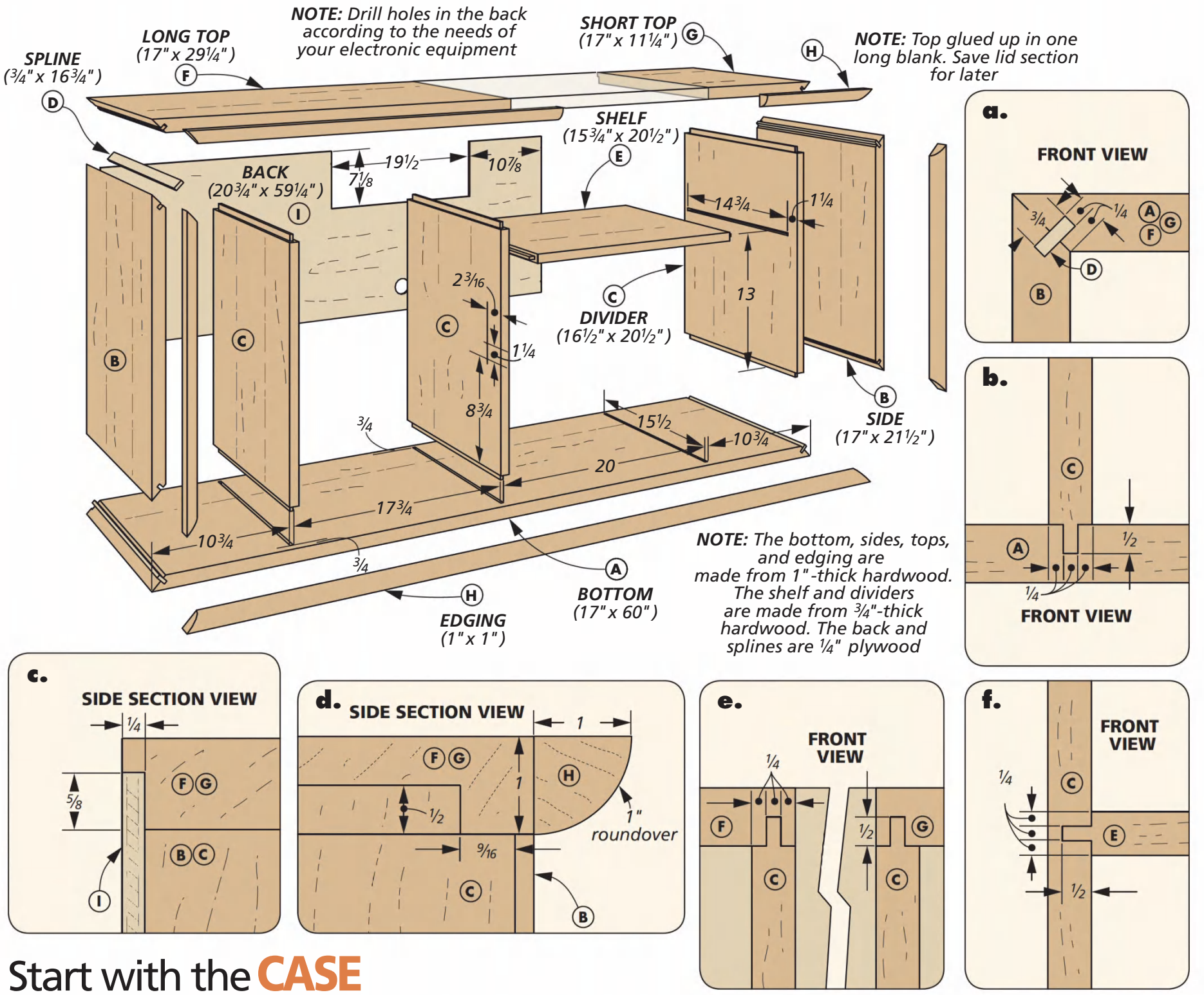


# Start with the CASE

Woodsmith GO ONLINE EXTRAS

For a jig to make the dadoes in the console, go to Woodsmith.com/248

To give the case strength, the bottom, sides, and top pieces are made from 1"-thick mahogany. To conserve space, the interior parts are made from ¾" material.

Start by gluing up panels for each part. The top is glued up as one large panel, just like the bottom. It will be cut into three separate pieces so that one can be used for the lid of the turntable.

After the clamps come off, you can cut the top into sections and set aside the piece for the lid. Now it's time to focus on the miters (detail 'a') on the ends of these pieces. It's going to be a bit of a wrestling match cutting the miters, especially on the bottom panel, so I employed my crosscut sled as an ally.

**CROSSCUT SLED.** To pull this cut off accurately, you need to ensure that your sled is perfectly square with the blade and that it doesn't rock while making the cut. The best way to do this is to clamp the workpiece to the sled and with the aid of a friend supporting the outer end of the workpiece, gently feed the panel through the tilted blade. After finishing the miters in the appropriate pieces, you need to cut slots in each one of them.

**SLOTS.** To make the slots, change out the blade for a ¼" dado set and flip the pieces on the sled. Again with the help of a friend, cut the slots along the miters.

**RABBET FOR THE BACK.** The plywood back that you'll install later fits in a rabbeted opening in the bottom, sides, and top (detail 'c'). Cut these rabbets now at the table saw. Next, it's time for a change of pace that involves your router.

**ROUTING DADOES.** The dadoes you need in the base, two tops, and dividers can be cut with your router and a simple jig that you'll find at *Woodsmith.com.* These, combined with a guide bushing, make this an easy task.

**TWO MORE THINGS.** Now, back at the table saw, you can grab the dividers and shelf and cut the tongues that join them (details 'b', 'e', 'f') to the case. I used the rip fence as a stop to make the shoulders of the tongues. Also, you need cut the plywood back.

**THE BACK.** After cutting the back to size, I made the splines that join the mitered corners together. The splines are cut from the same plywood as the back. Then I set the back to the side and focused on assembling the case.

## CASE ASSEMBLY

You're going to be juggling a fair amount of parts during assembly, so slow set glue is needed during this process. The drawings to the right add to what I'm talking about here. It all starts with bringing the bottom and the sides together. To clamp them up squarely, I used some large plastic assembly squares.

Next, clamp up the divider, shelf, and right speaker divider to create an H-shaped assembly, checking them for square as well. Glue the "H" assembly to the bottom, it's important to keep it flush to the rabbet on the back of the bottom. Also, glue the remaining speaker divider to the bottom, again, using the assembly squares to hold it in place.

**TOP IT OFF.** Now, it's a matter of using the splines to key the tops to the miters on the outer ends of the console while fitting them over the tongues on the dividers. Take your time here and bring the parts together gently.

**CASE EDGING.** To complete the front of the console, you need to add some edging. This edging is mitered in the same manner as the case panels and will hide the splines at the corners.

The edging profile is created with a 1" roundover bit (detail 'd', previous page). Make enough edging to trim the turntable lid you'll be making in a little while. To hold the edging in place, I made some profiled clamping blocks. The box to the right gives some more insight on using them. Up next is the base for the console and the bin to hold your albums.

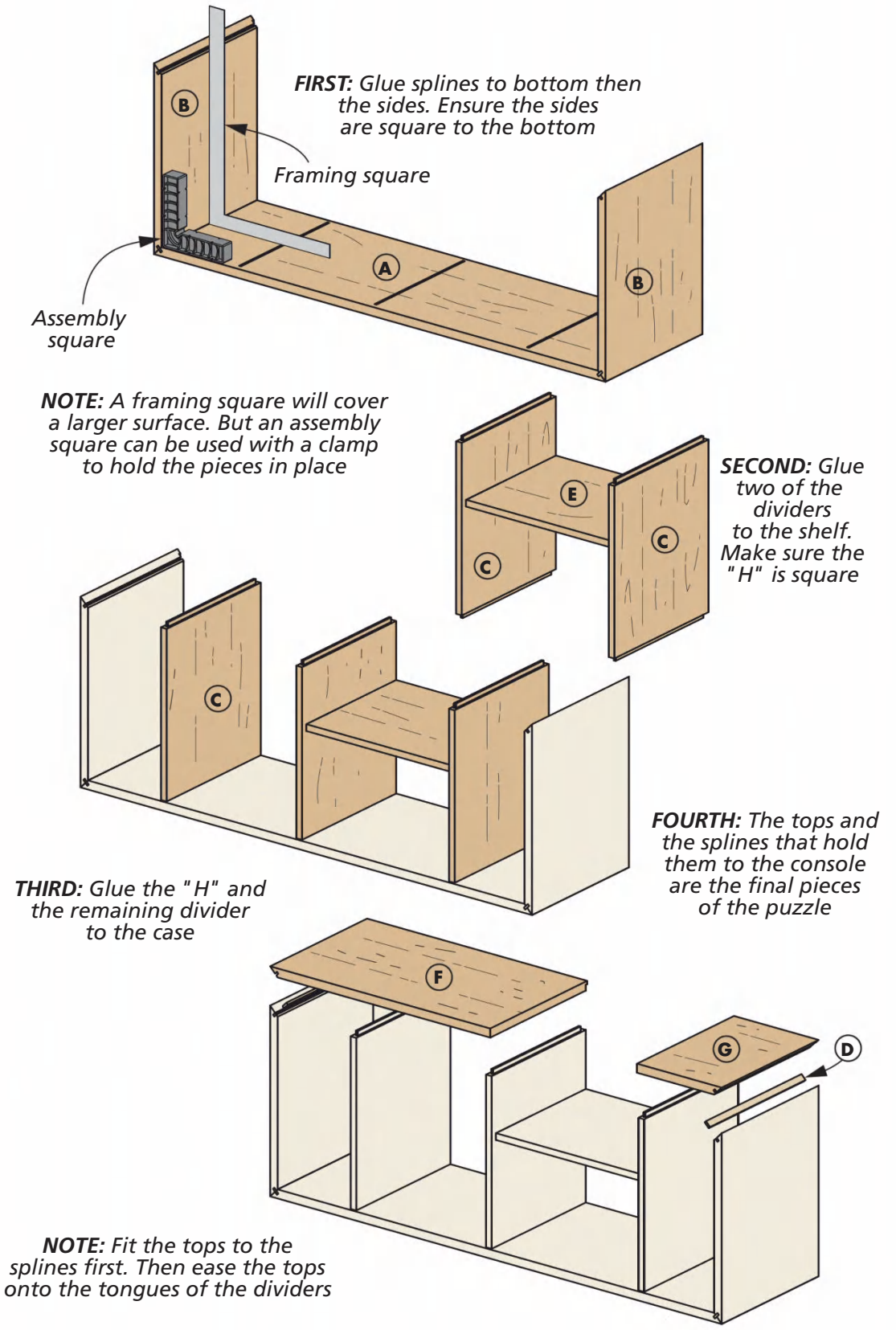


## EDGING THE CASE

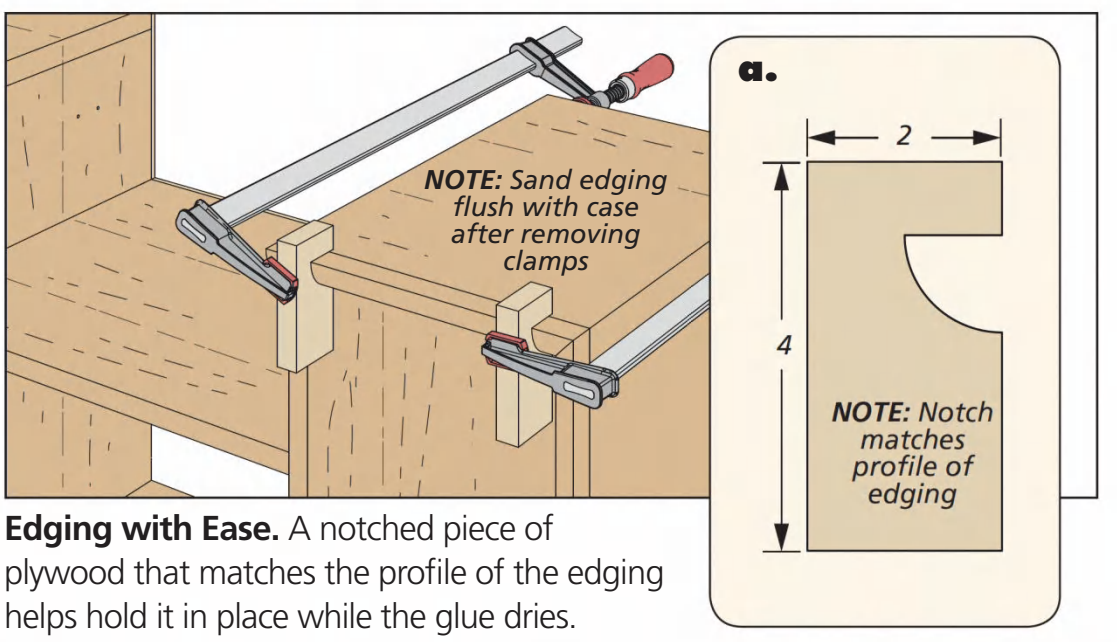


**Edging with Ease.** A notched piece of plywood that matches the profile of the edging helps hold it in place while the glue dries.

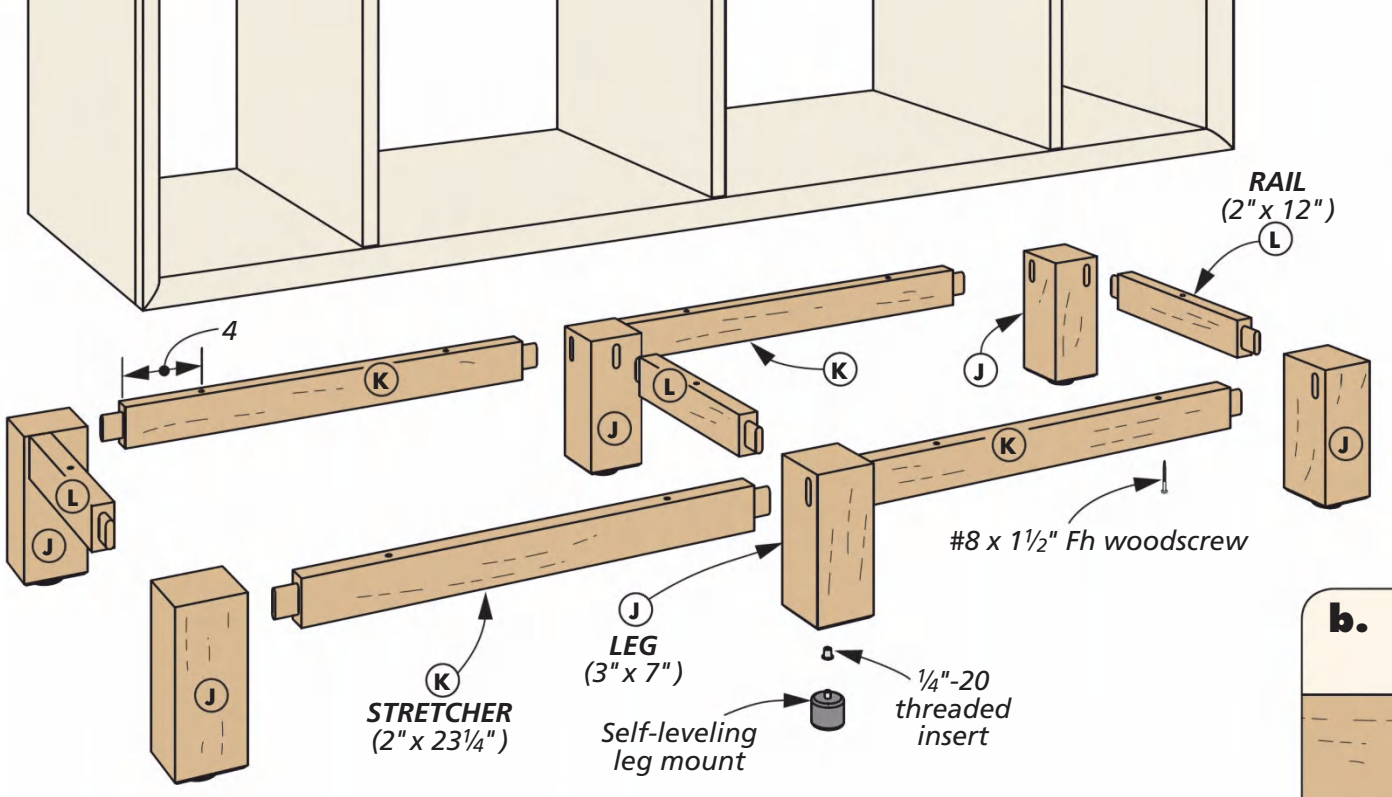


**NOTE:** *See sources on page 66 for hardware*

**NOTE:** *The legs are glued up from 1½"-thick hardwood. The stretchers and rails are made from 1"-thick hardwood*

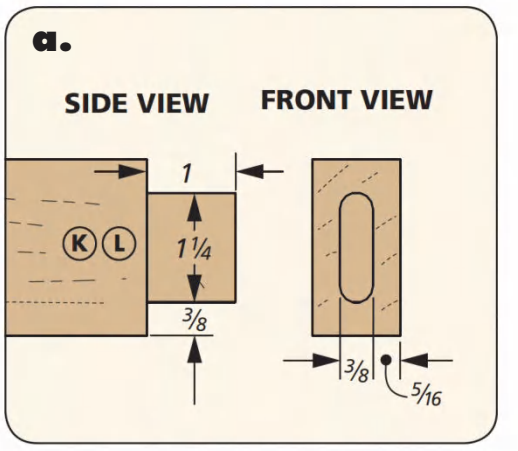


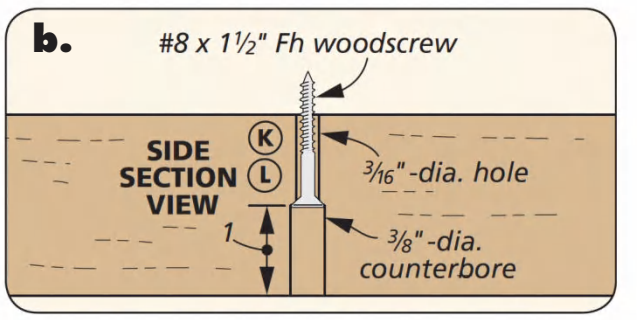


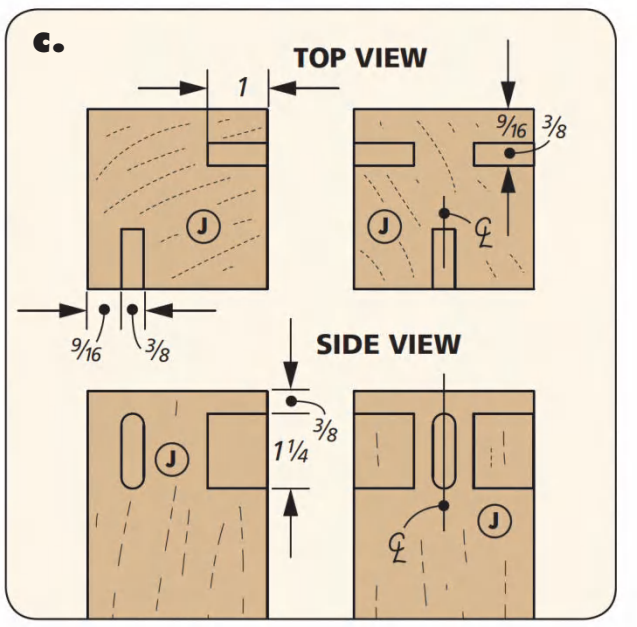


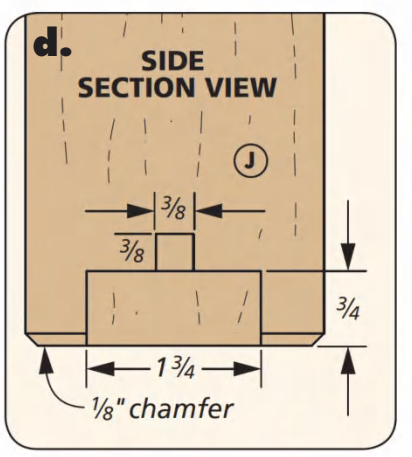


# Jump to the **BASE & BIN**

To bring the console to a more accessible height, and add a nice visual accent, I added a contrasting, painted base. As you see in the drawing above, the base of the console consists of six legs that are joined to stretchers and rails with mortise and tenon joinery. Since the base is going to be painted, poplar was the wood of choice. I started with the legs and their mortises.

**LEG WORK.** After gluing up and cutting the legs to length, I turned my focus to the bottom portion of the legs. As you see in detail 'd' above, there are three things to do here. First, find the center of the leg and drill a large hole for a self-leveling mount. Next, drill a smaller hole for the insert that the leveler threads into. Finally, chamfer the edges at the router table.

**MORTISES.** To make the mortises in the legs, I used a router with a straight bit, a bushing, and the jig you see in the box to the left. First, I routed all the mortises for the stretchers and outer rails. Then, adjust the jig fence to cut the mortises on the inside face of the center legs (detail 'c'). Now you can focus on the stretchers and rails.

**STRETCHERS & RAILS.** As the drawing above shows, the long stretchers tie the legs together end to end, while the shorter rails bring the legs together front to back. The tenons on all of them are the same (detail 'a').

Use the rip fence to locate the shoulder of the tenons, then nibble away the remaining waste to make the tenon. Round what you can of the tenons at the router table with a roundover bit. Then use a rasp to shape the remaining contour of the tenon to match the mortise.

**MOUNTING HOLES.** The console will be attached to the base with screws. The screws are countersunk from the underside of the stretchers and rails (detail 'b'). It's easier to drill these countersunk holes before assembly.

**GLUE UP.** Keep the legs, stretchers, and rails flush at the top while gluing them up. At this

Woodsmith GO ONLINE EXTRAS

For plans on the mortising jig, go to Woodsmith.com/248

## MORTISING THE LEGS

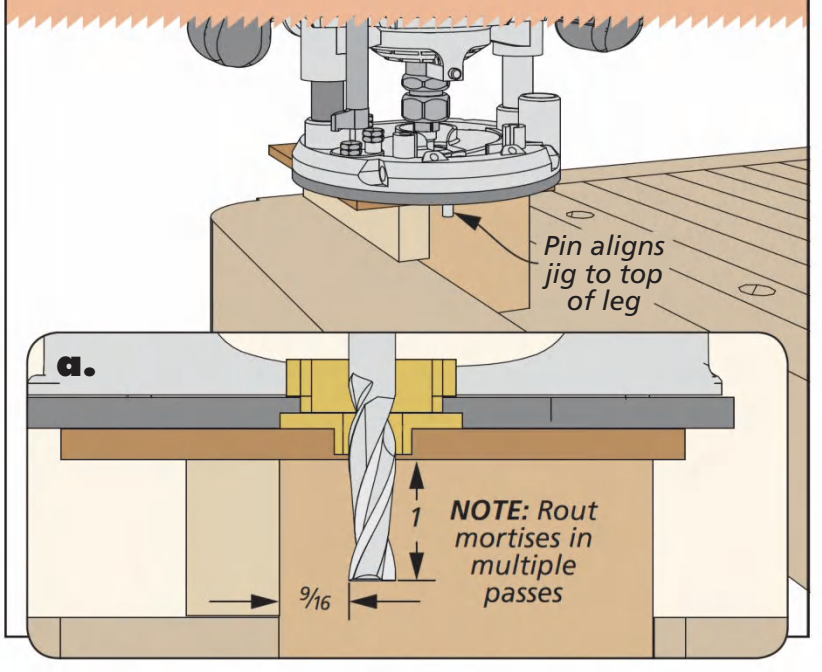

point, I took a break from building to do a little painting. Painting the base now lets me focus on the console hereafter.

Poplar is a well-behaved hardwood that's frankly fun to work with. After sanding and priming, it took the paint without incident. Now back to woodworking — the bin is next.

## THE BIN

Most storage options for vinyl records involve what's basically an oversized bookcase. The albums are stacked on edge with the closed spine facing outward identifying the artist and the name of the recording.

This bin stores albums in the same manner, with the benefit of hiding the albums until needed. Invisible hinges anchor the bin to the case and let you tilt the bin forward (detail 'd'). A scissor hinge holds the bin stable while you make your selection. Now this bin might not store your entire collection, but it lets you keep your favorites close by.

**SIDES FIRST.** After sizing the four pieces of the bin, focus on the sides. Start by cutting the rabbet on the bottom inside edge. Then cut the tongue on the front edge (detail 'a'). Follow this with laying out the arc on the sides and rough cut them to shape with a jig saw or band saw. Sand them smooth and ease the edges of the arc. The bottom (detail 'c') has a tongue across the front edge. This is the next cut.

**THE FRONT.** The grooves on the inside face of the front of the bin mate with the tongues on the sides and bottom (detail 'b'). I created these stopped grooves at the router table.

Before gluing up the bin, you need to address the mortises for the invisible hinges (in the bin front and in the console). Detail 'd' shows the location of the mortise in the bin front. Detail 'f' shows the position of the mortises in the console case. A bushing and template along with a straight bit make for a precise mortise. After cleaning up the sawdust and stowing away the router, you can glue up the bin.

**ATTACH THE BIN.** Before adding the hardware, attach the support block to the back of the bin bottom that you see in detail 'e' this block holds the front of the bin flush with the front edge of the dividers. When the hardware is in place, you can turn your attention to making the speaker cover on the next page.

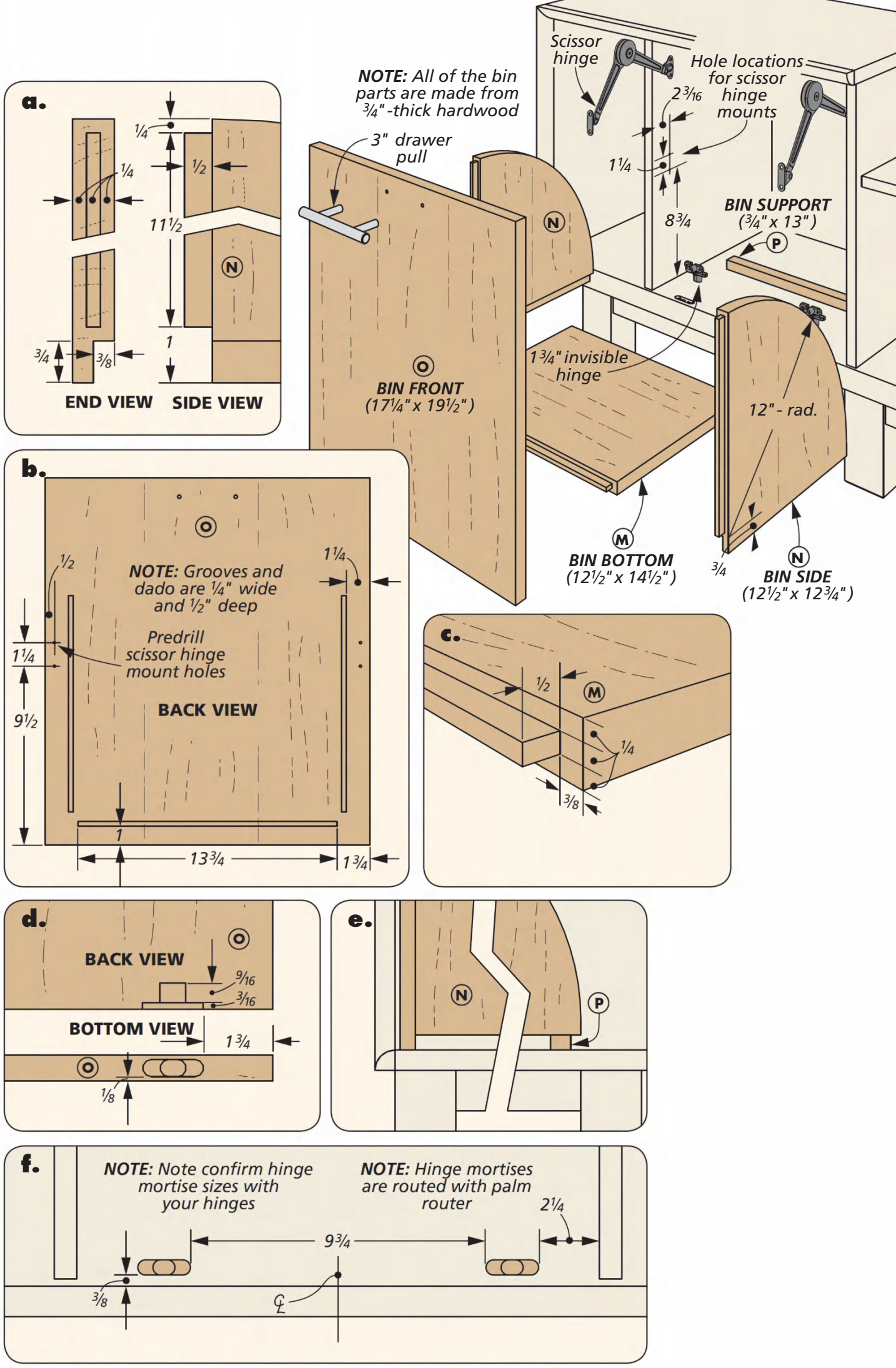

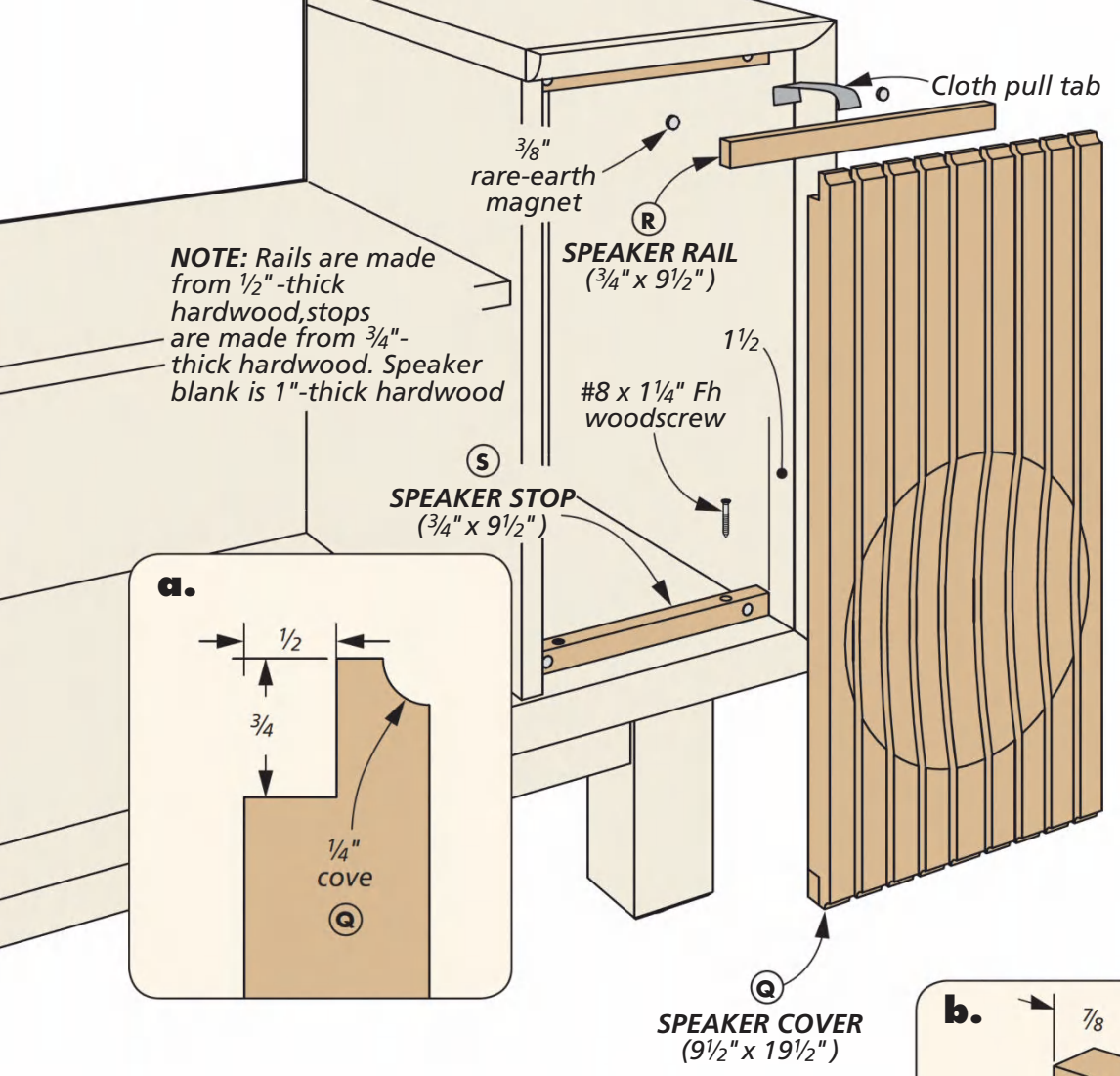


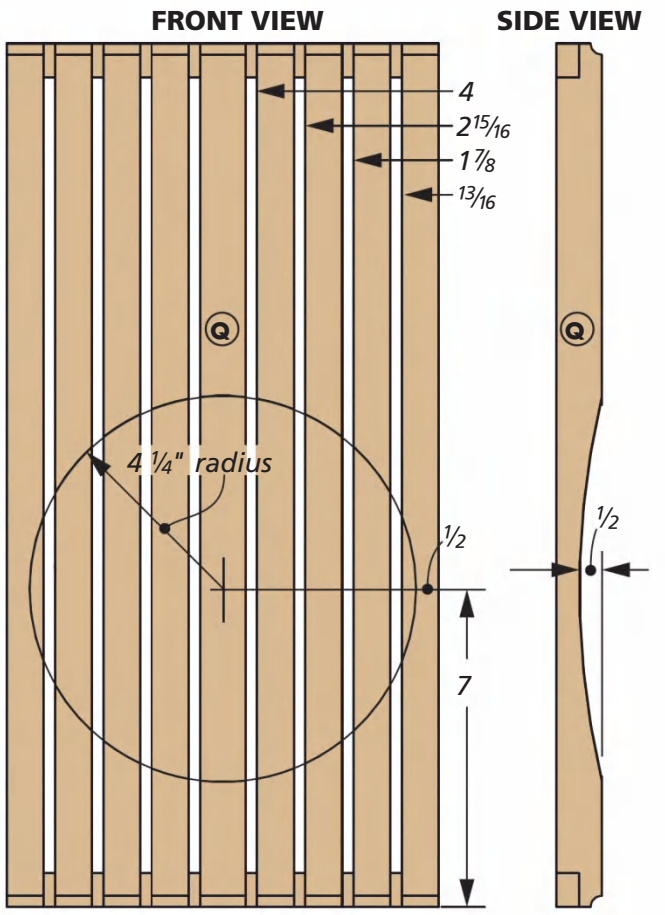


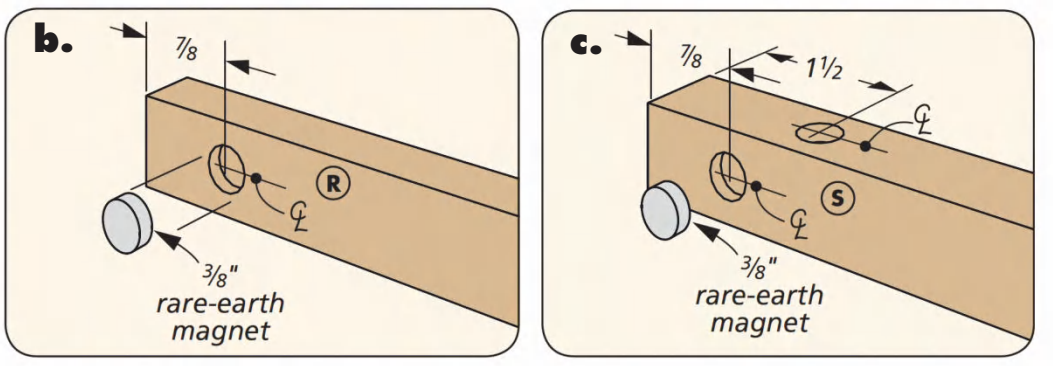


# Next, the SPEAKER COVERS

The covers shown above are technically for the speaker cavity — a space where you can house your speakers while maintaining the style of the cabinet. The cover starts out as a blank that gets shaped on the ends. Then a shallow hollow is cut in the face, after which the blank is sliced apart and then attached to rails. Rare-earth magnets hold the covers in place. So, yeah, that's a fire hose worth of information. Lets start at the beginning.

Shaping the ends of the blanks is square one. This involves routing the cove on the front and cutting the rabbet in the back. Detail 'a' shows both of these.

Now on to the more exotic work — scooping out the circular hollow that mimics the woofer location on the speaker cover. Not to worry though, the jig on the next page addresses that chore. There's a detailed version of the jig available online at *Woodsmith.com* that provides all the info you'll need to build it.

**ANATOMY OF THE JIG.** The jig consists of a base with a pivot pin that holds a backer board. The backer board holds the speaker blank in place with double-sided tape. Why not just drill a hole in the speaker blank? As you see in the side view of the drawing above, I felt this would bring the router bit a little too close to the pivot pin.

Attached to the base are two rails. The top of the rails have an arc cut into them to correspond with the curve of the hollow. The bottom of the rails have a large notch that allows you to rotate the speaker cover blank and backer board as you rout the hollow.

To make the router work with this jig, you need to replace the factory base with an auxiliary base. This base's length matches the width of the jig. The new auxiliary base has rabbets cut into the sides that key it to the arcs on the rails. And a hole in the center for the bit.

With the auxiliary base mounted to the router, use a centering pin to locate the center of the pivot pin hole in the base. Then you can drill that hole in the base and install the pin. Now you're ready to use the jig.

**HOW THE JIG WORKS.** Start by attaching one of the blanks to the backer board and slide it into position under the rails. Then you can focus on setting up the router and bit.

I chose to use a spiral upcut bit to carve the hollow in the blanks. Detail 'a' on the next page shows a good view of what you're up against. The overall depth of the hollow is ½", which I didn't feel comfortable doing in one pass, so I made this in multiple passes.

In this case, multiple passes mean wedging the blank in the jig and guiding the router down the rails and into the blank. Guide the router evenly along the rails until the bit emerges out

the other side. Rotate the blank in the jig by the width of the bit, reset the wedges, and repeat the process until the circle is completed (detail 'b').

Now you can lower the bit for the next round of routing the hollow. Just remember to wedge the blank firmly in the jig.

I think doing a test run of this jig on a scrap piece is a smart move. Doing so will give you a feel for how the jig and router interacts with the wood before going live with the cover blanks.

When you've completed the hollow in both blanks, sand out any marks that were left from routing. It's time to cut up all the work you've just done.

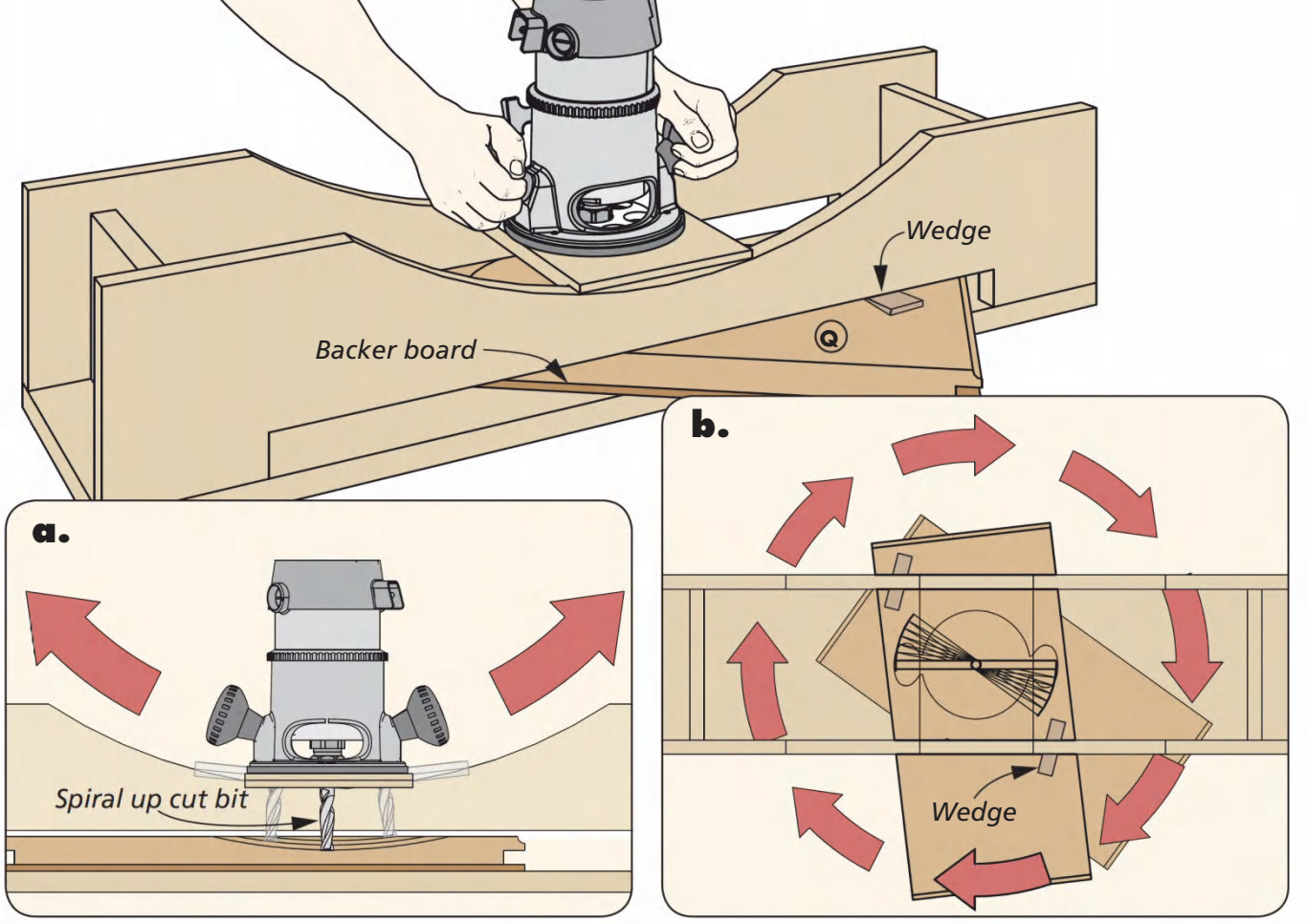


## CUTTING THE SLATS

You'll notice in the main drawing that the slats of the speaker cover are not all the same width. The center slat is wider than the others by 3⁄16". If you didn't have the hollow profile to deal with, you could just slice the strips and space them evenly on the rails. Here's an easy way around all of those troubles.

**TEMPORARY CLEATS.** Using double-sided tape, I attached three cleats to the back of each blank. The cleats don't have to be perfectly spaced, but they should match the width of the blanks. Figure 1 below shows this.

**RIP STRIPS.** Using a 1⁄4" dado blade, slice through the blanks and slightly into the cleats, working from the center out, flipping the blank end for end as you go (Figure 2). Adjust the fence after each set of passes until both covers are complete. Don't remove the temporary cleats just yet.

**RAILS & STOPS.** This is a good time to take a break from the covers and make the rails that lock the slats of the covers in place. Also make the stops that hold them in place on the console. These two parts are seen in details 'a' and 'b' on the previous page. Each of these parts have rare-earth magnets in the ends, which are epoxied in place.

Now you can glue and pin nail the rails to the back of the blanks. Then remove the temporary cleats. Figure 3 below shows the sequence.

**INSTALL THE COVERS.** The four stops at the top and bottom of the speaker openings are screwed in place. As you know, rare-earth magnets take their job seriously — they don't want to let go. So I installed a cloth pull tab to the top of the covers that you see in the main drawing on the previous page. The lid that protects the turntable is all that's left to make for the console.

Woodsmith GO ONLINE EXTRAS

For complete details on making the hollow in the speaker cover, go to Woodsmith.com/248

## CUTTING THE SLATS FOR THE SPEAKER COVER

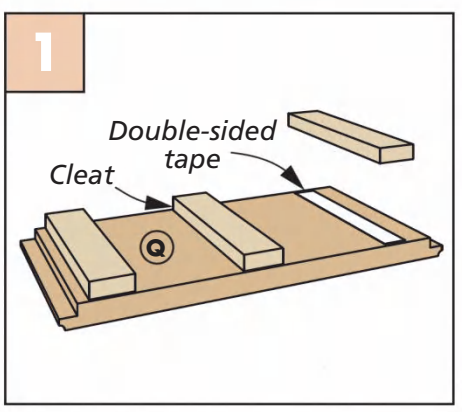


**Attach Cleats.** The length of the cleats matches the width of the speaker blank.

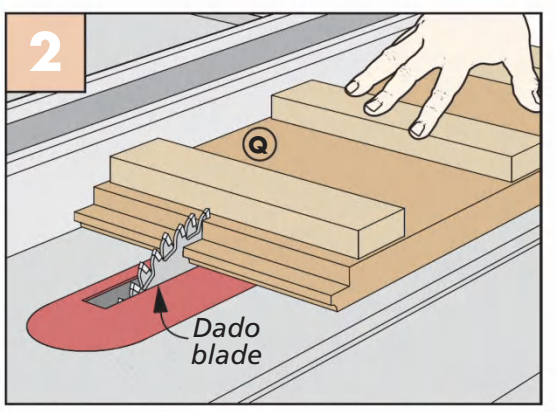


**Rip Slats.** The first pair of cuts defines the thicker middle slat. Flip the blank to define opposite edges.

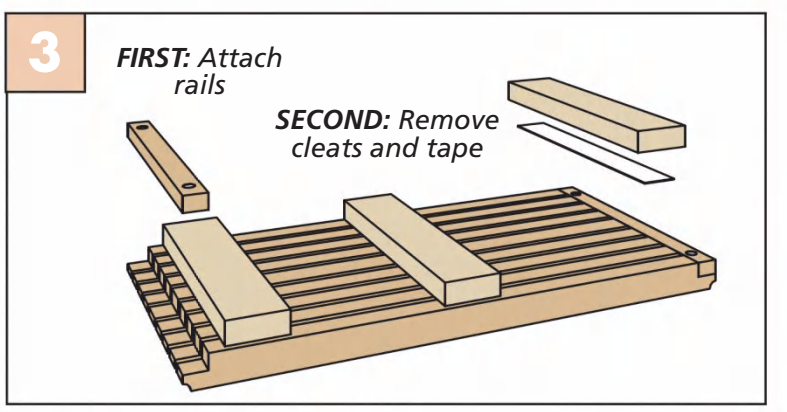


**Assemble Cover.** Glue, clamp, and pin nail the rails in place before you remove the cleats. Pry the cleats off after the glue drys so the slats don't move.

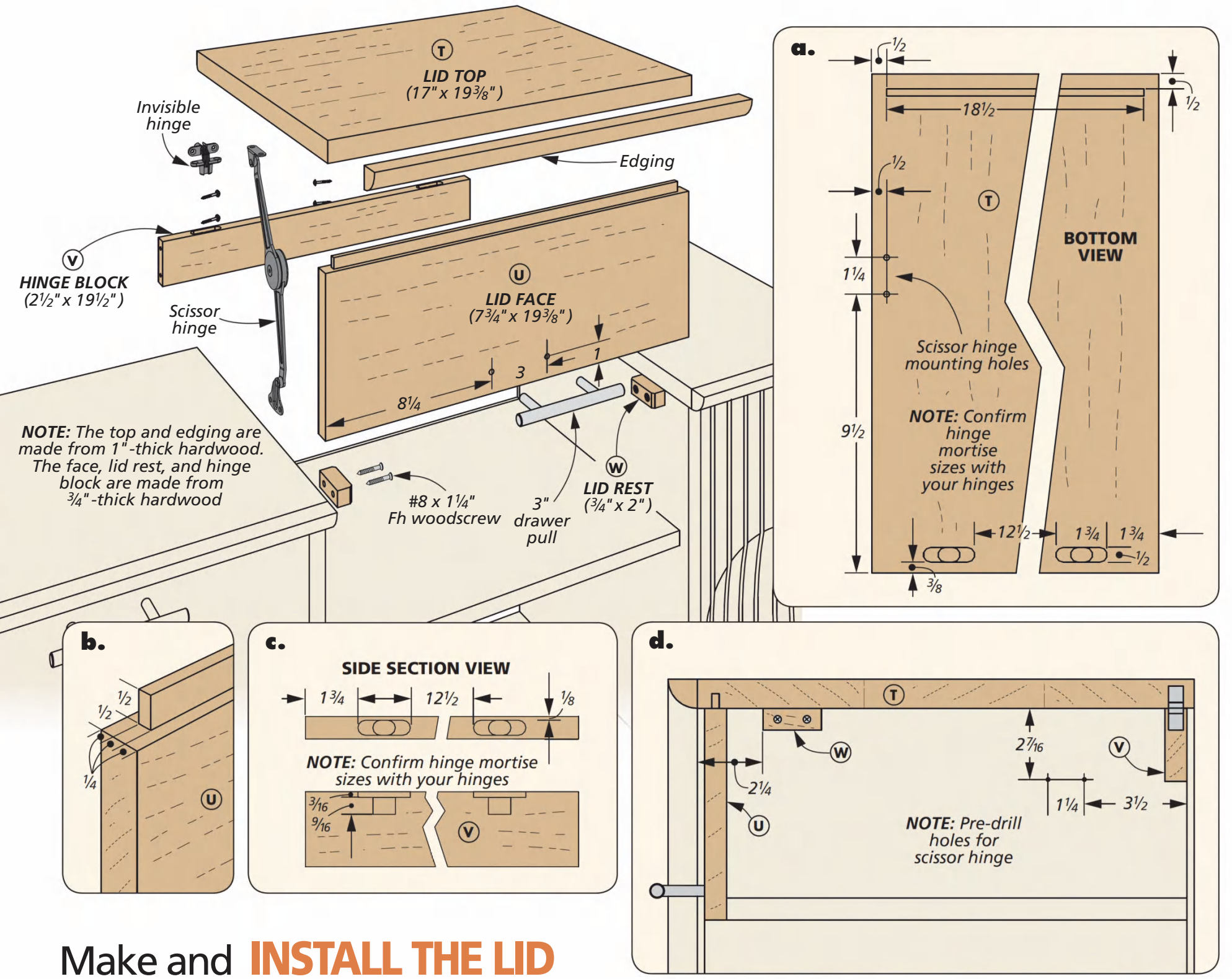


# Make and INSTALL THE LID

The lid that covers the turntable is the last thing to make for the console. And compared to the cover you just finished, it'll be a piece of cake. The installation takes a little focus, but we'll get to that shortly.

The drawing above shows that the turntable lid is made from two pieces. A lid panel that is made from the piece cut out earlier is joined to a face with tongue and groove joinery. The lid is attached to a hinge block that is pocket screwed to the console case. There's a piece of edging that matches the edging on the case glued to the front of the lid panel. (Detail 'd' gives you a quick look at all of this.)

**THE LID.** On the underside of the lid, there's a long groove for the tongue of the face. The groove is easily done at the router table. Also, there are two mortises at the rear for the invisible hinges that tie it to the console, you can see both of these in detail 'a.'

Because the mortises in the lid top were more accessible, I made them at the drill press. While I was there, I drilled the mortises in the hinge block also (detail 'c').

The last thing to do before gluing up the lid is to cut the tongue on the top edge of the face (detail 'b'). Complete the lid by gluing the edging to the top.

**HINGE BLOCK.** You've already drilled the mortises in this piece, so there's just one detail left. As I mentioned earlier, the hinge block is attached to the console with pocket screws, so drill those holes now.

On the surface, attaching the lid to the console seems pretty straightforward. But there's a trip wire that you need to be aware of — invisible hinges. These hinges can be a little temperamental in operation so the following steps and the drawings on the next page helps to keep them under control.

**HINGES & CLEATS.** Attach the invisible hinges to the lid and hinge block, as you see in Figure 1 on the next page. Then screw a pair of lid rests on each side of the

## INSTALLING THE LID

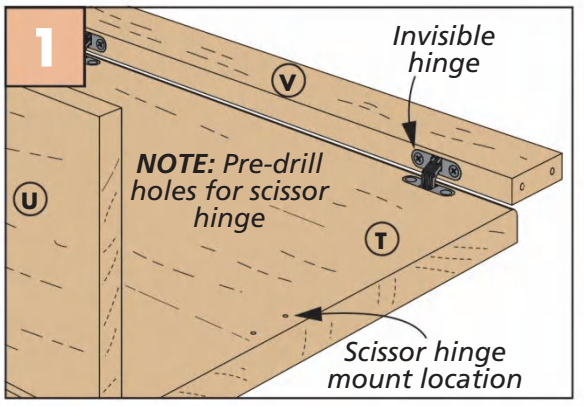


**Invisible Hinges.** Screw hinges in the mortises of the hinge block first. Then position the hinges in the lid top and screw in place.

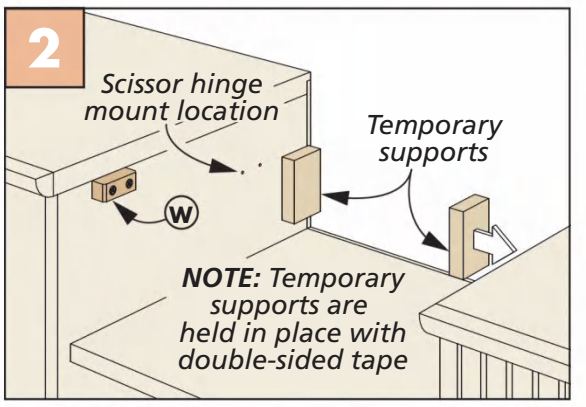


**Support.** A pair of temporary cleats at the back of the case supports the hinge block. The lid rests in the front are permanent supports for the lid.

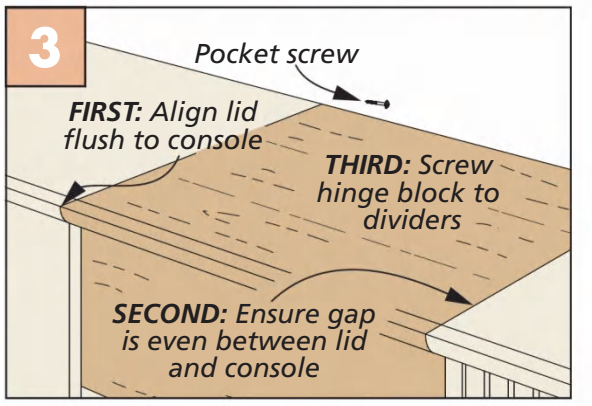


**Perfect Alignment.** Rest the lid on the cleats and fine-tune its position before securing it with pocket screws. Finally, attach the scissor hinges.

lid opening to hold the lid flush with the top (Figure 2). The temporary cleats that you see at the back are there to support the hinge block while screwing it to the console.

Now, position the lid in its opening and align it to the front of the console. Also confirm that the lid is evenly spaced in the opening, then attach it to the console (Figure 3).

To protect the project, I stained it and applied three coats of lacquer that helped fill the open grain of the mahogany. And with that, the console is ready to rock the entertainment room. W

## Materials, Supplies & Cutting Diagram

| | | | | | | | |
|---|---|---|---|---|---|---|---|
| **A** | Bottom (1) | 1 x 17 - 60 | **E** | Shelf (1) | ¾ x 15¾ - 20½ | **I** | Back (1) | ¼ ply. - 20¾ x 59¼ |
| **B** | Sides (2) | 1 x 17 - 21½ | **F** | Long Top (1) | 1 x 17 - 29¼ | **J** | Legs (6) | 3 x 3 - 7 |
| **C** | Dividers (3) | ¾ x 16½ - 20½ | **G** | Short Top (1) | 1 x 17 - 11¼ | **K** | Stretchers (4) | 1 x 2 - 23¼ |
| **D** | Splines (4) | ¼ ply. - ¾ x 16¾ | **H** | Edging | 1 x 1 - 122 rgh. | **L** | Rails (3) | 1 x 2 - 12 |
| | | | | | | **M** | Bin Bottom (1) | ¾ x 12½ - 14½ |
| | | | | | | **N** | Bin Sides (2) | ¾ x 12½ - 12¾ |
| | | | | | | **O** | Bin Front (1) | ¾ x 17¼ - 19½ |
| | | | | | | **P** | Bin Support (1) | 1 x ¾ - 13 |
| | | | | | | **Q** | Speaker Cover Blanks (2) | 1 x 9½ - 19½ |
| | | | | | | **R** | Speaker Rails (4) | ½ x ¾ - 9½ |
| | | | | | | **S** | Speaker Stops (4) | ¾ x ¾ - 9½ |
| | | | | | | **T** | Lid Top (1) | 1 x 17 - 19⅜ |
| | | | | | | **U** | Lid Face (1) | ¾ x 7¾ - 19⅜ |
| | | | | | | **V** | Hinge Block (1) | ¾ x 2½ - 19½ |
| | | | | | | **W** | Lid Rests (2) | ¾ x ¾ - 2 |

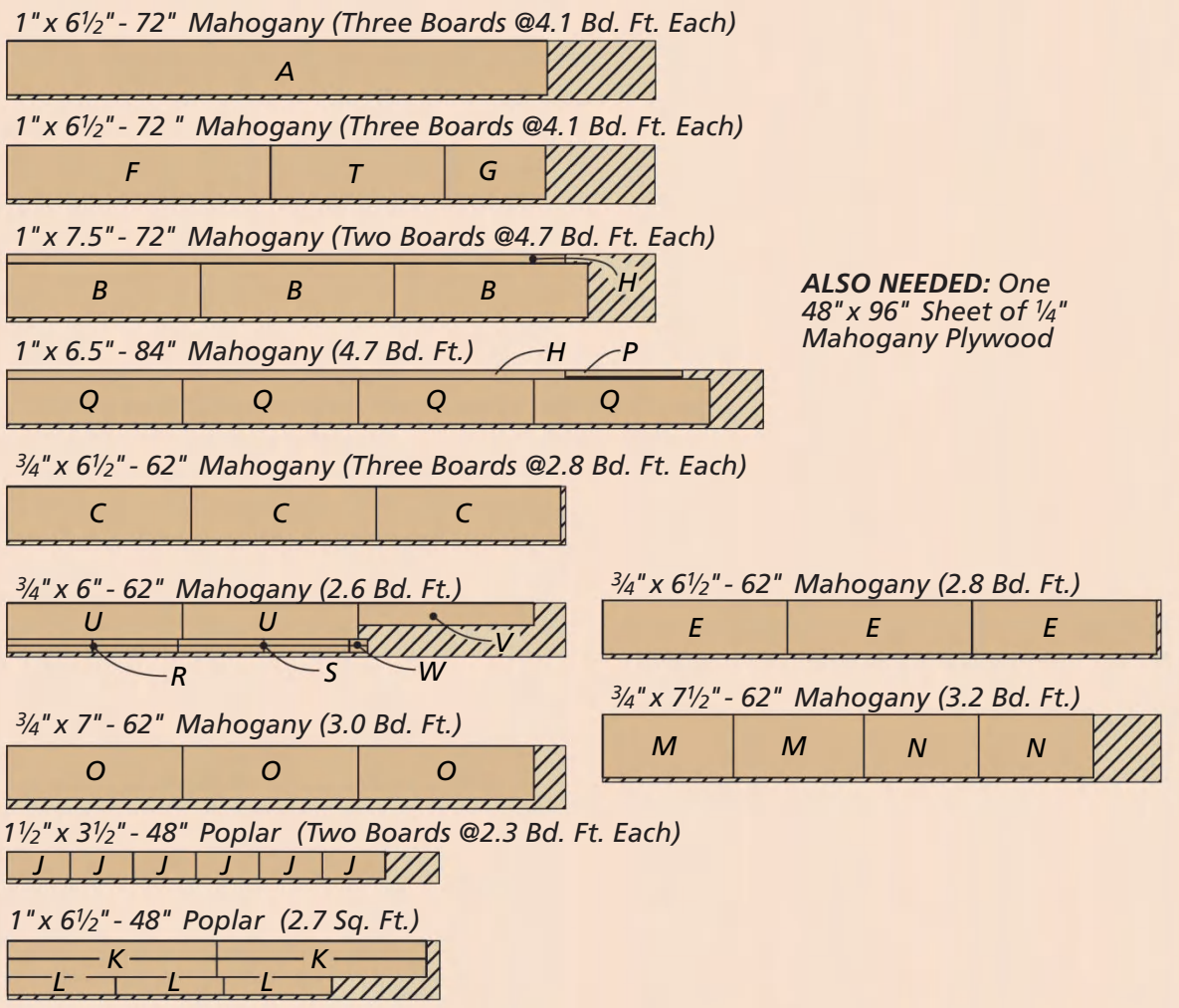


***ALSO NEEDED:*** *One 48" x 96" Sheet of ¼" Mahogany Plywood*

- (6) Self-Leveling Legs
- (6) ¼" x 20 Tapping Inserts
- (16) ⅜" Rare-Earth Magnets
- (4) 1¾" Invisible Hinges
- (3) Scissor Hinge Bodies
- (3) Scissor Hinge Door Brackets
- (3) Scissor Hinge Cabinet Brackets
- (2) 3" Drawer Pulls
- (11) #8 x 1½" Fh Woodscrews
- (4) #8 x 1¼" Fh Woodscrews
- (17) #8 x 1" Fh Woodscrews
- (1) 6 x 6" Pull Tab Cloth

# HEIRLOOM Project

Written by: Logan Wittmer; Project Design: John Doyle

# Dining Table

This traditional farmhouse table and bench incorporate timber frame details to create a spot you'll be proud to gather around.

Thinking back to my parent's house (and my house today), the dining table has always held a lot of symbolism and meaning that wasn't (and isn't) always apparent. In our busy, day-to-day lives, each member of the family has their own agenda. Kids go off to school or activities, parents go to work or run errands, and the lucky among us head into the shop. But, at the end of the day, the entire family comes back together to share an evening meal and catch up with one another. This invaluable family time is almost always around the dinner table. And this rustic farmhouse table is ideal for creating those memories.

**TIMBER FRAME DETAILS.** When you look at this dining table, you can see that it has many details that take inspiration from traditional timber framing. The prominent ones are the knee braces and pegged joints. They add a sense of stability and permanence to the project. Something that will stand the test of time.

One of the things you're sure to pick up on right away is that this table is built using reclaimed lumber. This reclaimed stock is beautiful, old growth Douglas fir. Not only does the stock choice match the design well, but the timber is already rich with character — before you start adding your own during your family dinners.

▼ The traditional details on this table, like this breadboard end, are enhanced with the reclaimed stock. The weathered surface is saturated with history, and even shows some of the saw blade marks from the original circular sawmill.

Illustrations: Dirk Ver Steeg

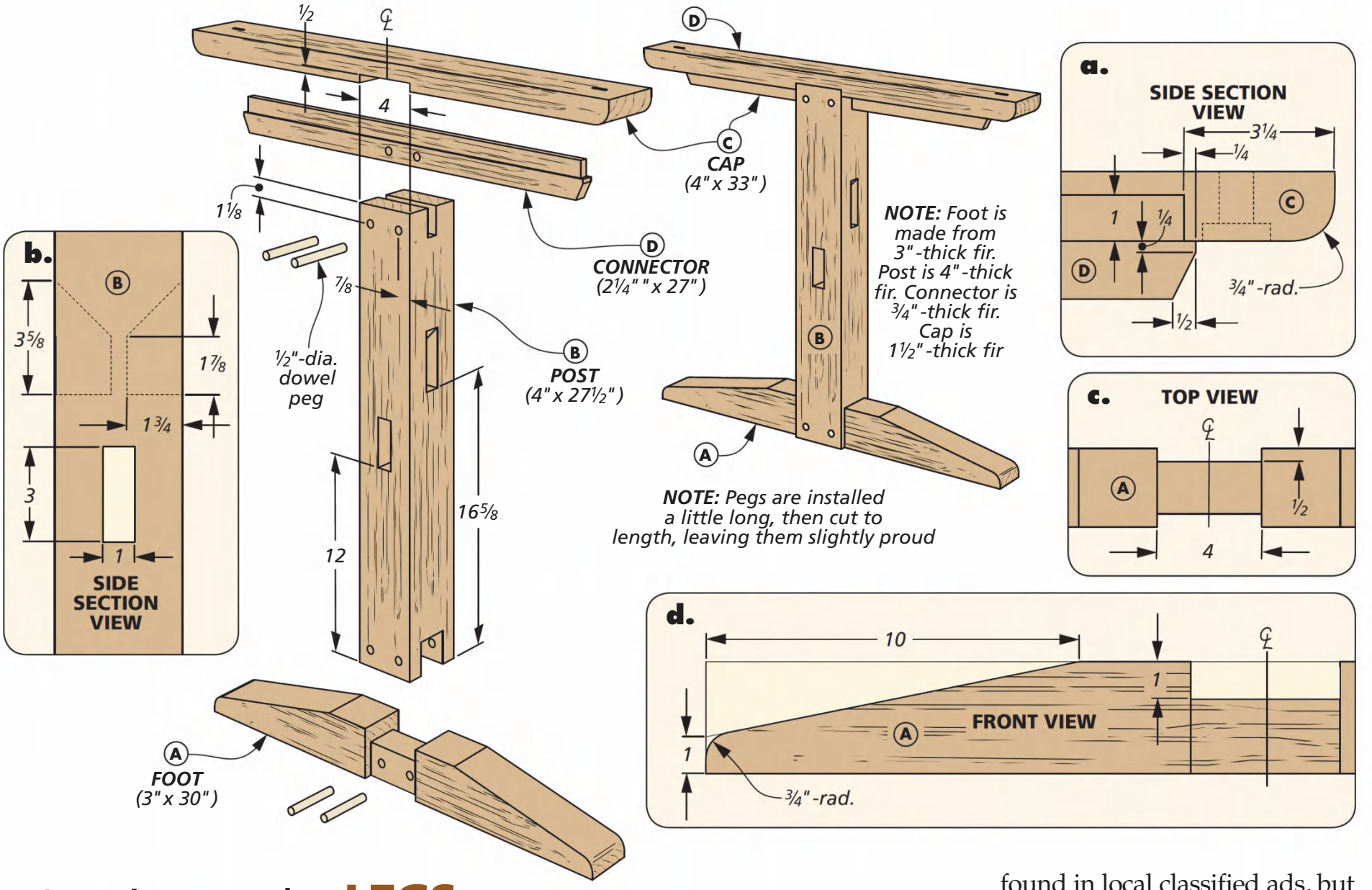


# Starting on the **LEGS**

Woodsmith GO ONLINE EXTRAS

Plans for the sliding fence are available at Woodsmith.com/248

The table starts with a pair of end assemblies. Each one begins with a post and a foot. To provide a means for attaching the top, a cap and connector are added to the top of the post. Later, you'll make a stretcher and braces to tie the end assemblies together.

**RECLAIMED STOCK.** Before making any cuts, lets talk about working with reclaimed stock. If you choose to use salvaged stock, be aware that it may have nails and the weathered surface is often embedded with dirt that can be hard on cutting edges. Reclaimed stock can often be found in local classified ads, but you can also use dimensional framing lumber if you can't find reclaimed stock. For the base of the table, I chose to machine all of the stock so I had fresh, square surfaces to work with.

**SADDLE JOINT.** After cutting the foot blanks to size, the first thing to take care of is the saddle joint that will be used to connect the

## POST

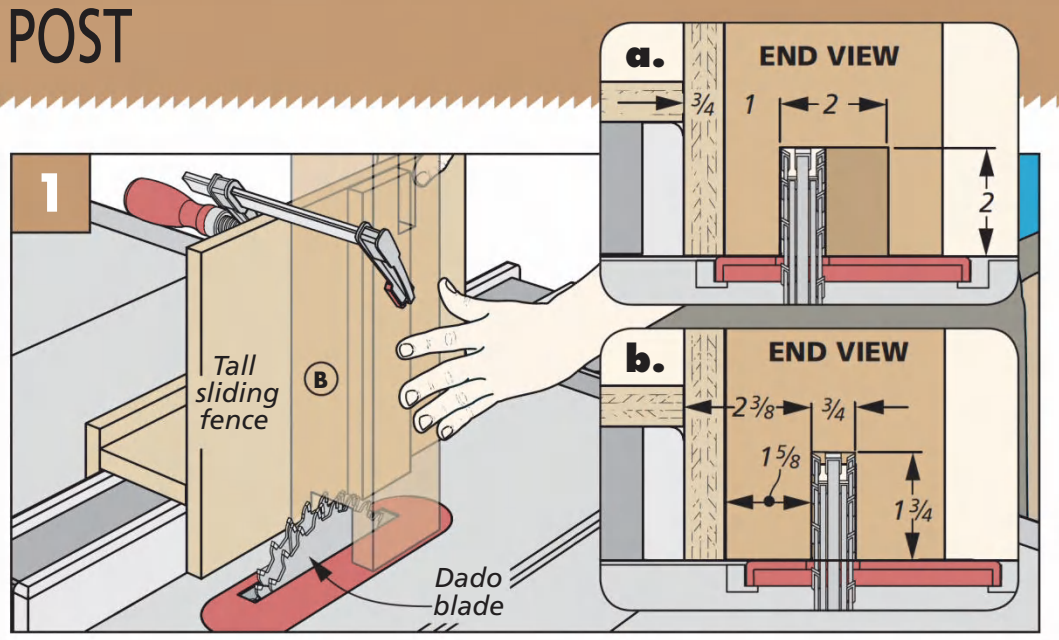


**Saddle Joint.** At the table saw, cut the saddle joint in both ends of the post. Clamp the post to a tall, sliding fence for additional support.

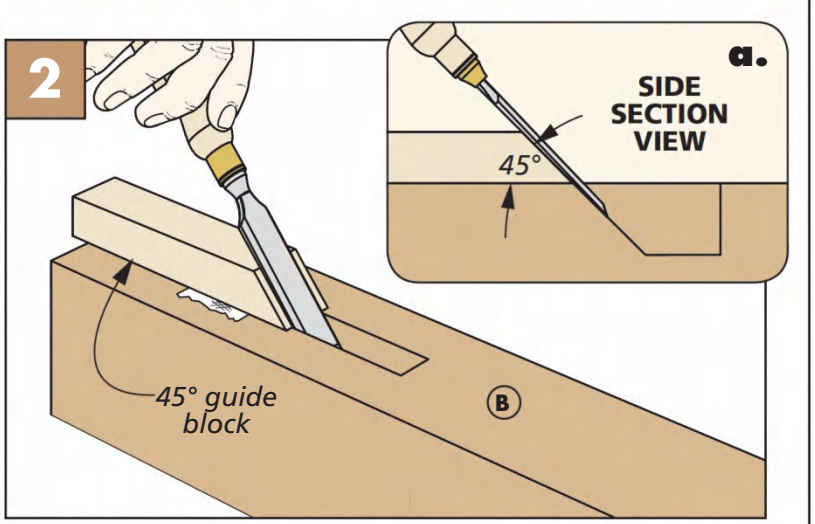


**Angled Mortise.** Use an angled block to guide the chisel to form the sloped end of the mortise.

foot to the post. Using a dado blade at the table saw, cut the two faces first (detail 'c'). Then raise the blade to cut the top of the notch (detail 'd'). Now, take a trip to the band saw to cut the feet to shape. Smooth them out with a file and sandpaper.

**POST.** Working up the base, the posts are the next order of business. Start by cutting a notch on the end of each post to fit over the foot. You can see this in Figure 1 on the previous page. While you're at the table saw, cut the notch for the connectors that you'll make in a little bit. You can see this notch in Figure 1b.

Now you're ready to chop some mortises. Each post has three mortises. There is a through mortise for the stretcher. There are also two mortises for the knee braces. These are angled along one side. To form the mortises, I drilled out the waste and then cleaned them up with a chisel. To form the angled mortise shoulder, use a block to guide your chisel (Figure 2, previous page).

**TOP IT OFF.** The caps that connect the posts to the top are up next. After cutting these to size, they're notched at the table saw. Then, you can rout a stopped groove down the center (Figure 1), along with slots for the top connecting bolts. Finish up by drilling holes in the slots (Figure 2) and rounding the ends of the cap with a rasp.

To tie everything together, you'll need to create a connector by cutting a tongue on one edge of a blank using a dado blade in the table saw (Figure 3). Then, bevel the ends.

**PEGS.** Now, you're ready to assemble the ends. Pegs are used to lock the joints together. Apply glue to the joints and assemble them. Then, drill holes for the pegs and drive them into place (Figure 4). Apply glue to the last half of the dowel as it's driven home.

## CAP, CONNECTOR & ASSEMBLY

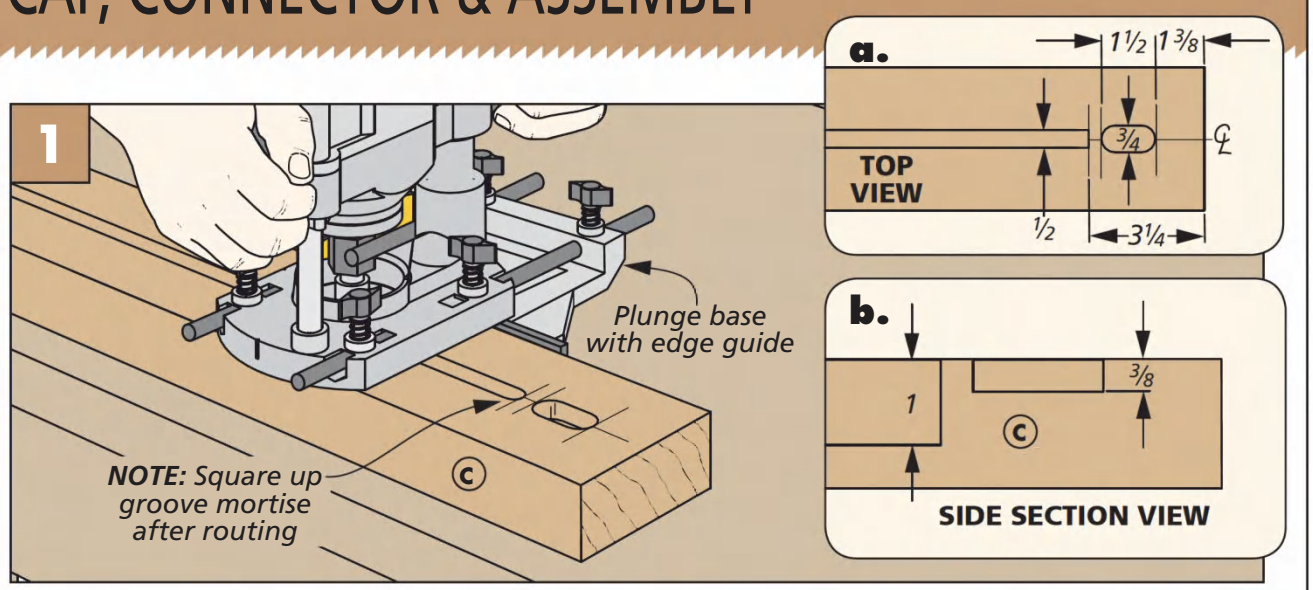


**Long Groove.** Rout a stopped groove with a plunge router. Use an edge guide to guide the bit down the workpiece, then square up the ends with a chisel.

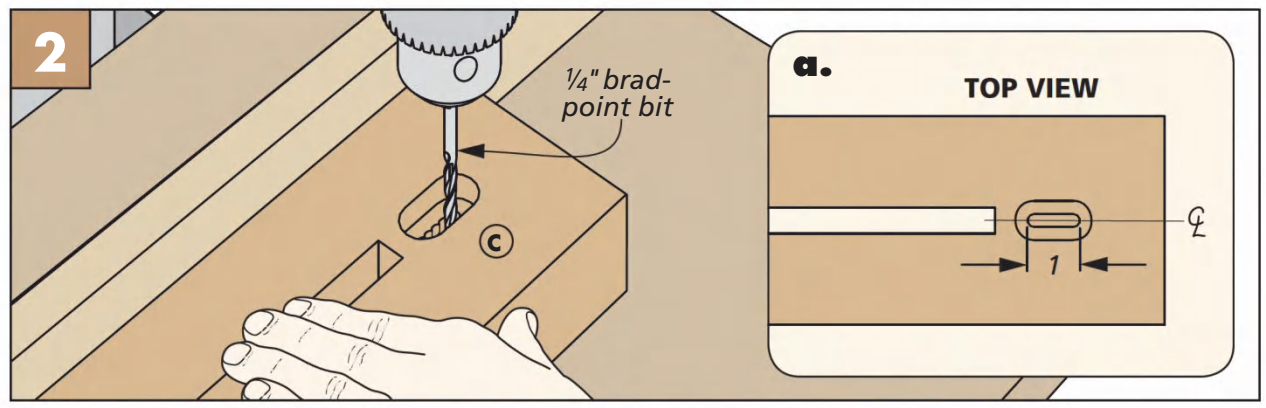


**Expansion Slots.** Rout a stopped slot in the cap, then use a drill bit to drill overlapping holes, forming a through slot. This slot will allow the top to expand and contract.

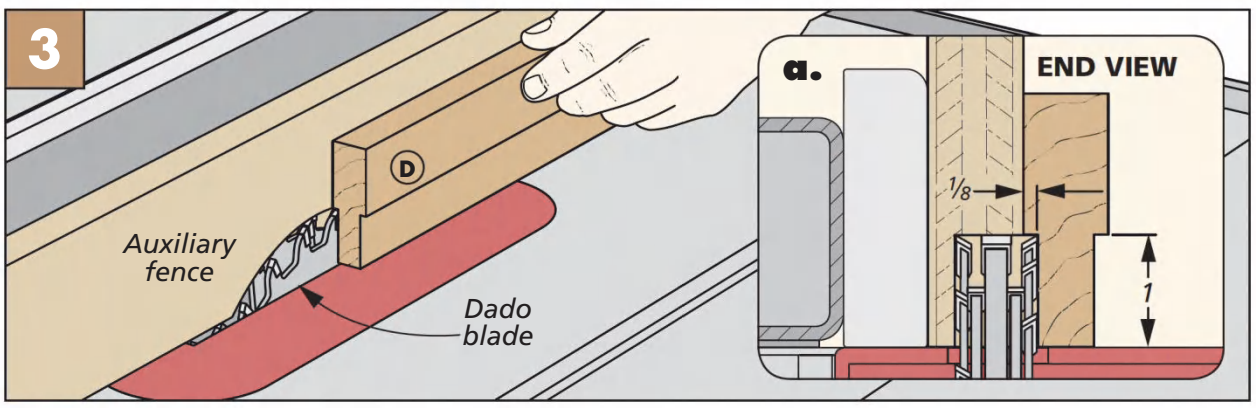


**Tongue.** At the table saw, use a dado blade buried in an auxiliary fence to form a tongue on one edge of the connector. Sneak up on a snug fit in the cap slot.

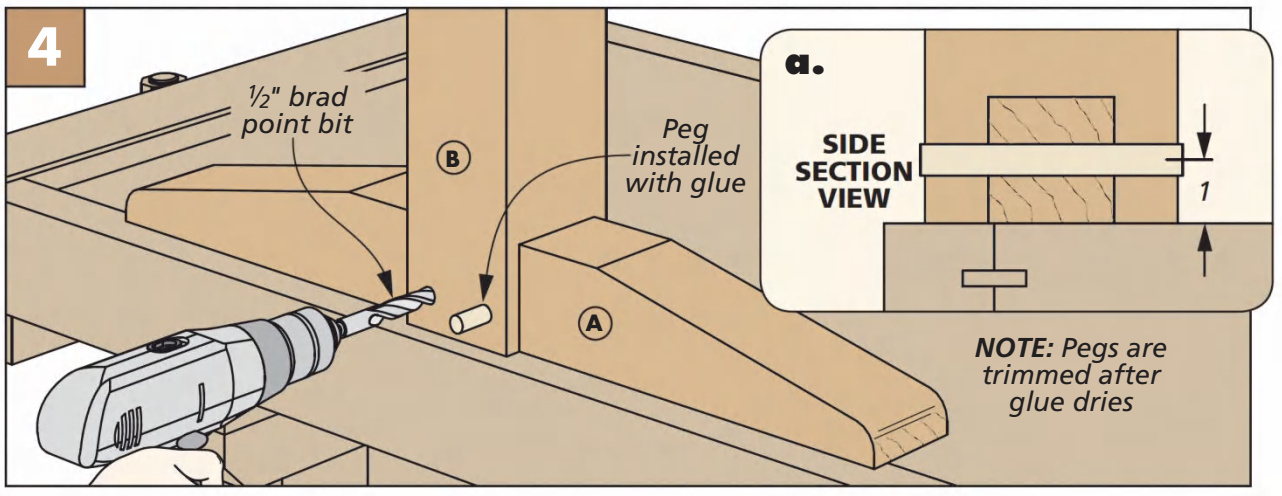


**Locking Pegs.** After applying glue to the joints, clamp them together. Next, drill through holes for the pegs. Finally, drive a peg through the joint, locking it together.

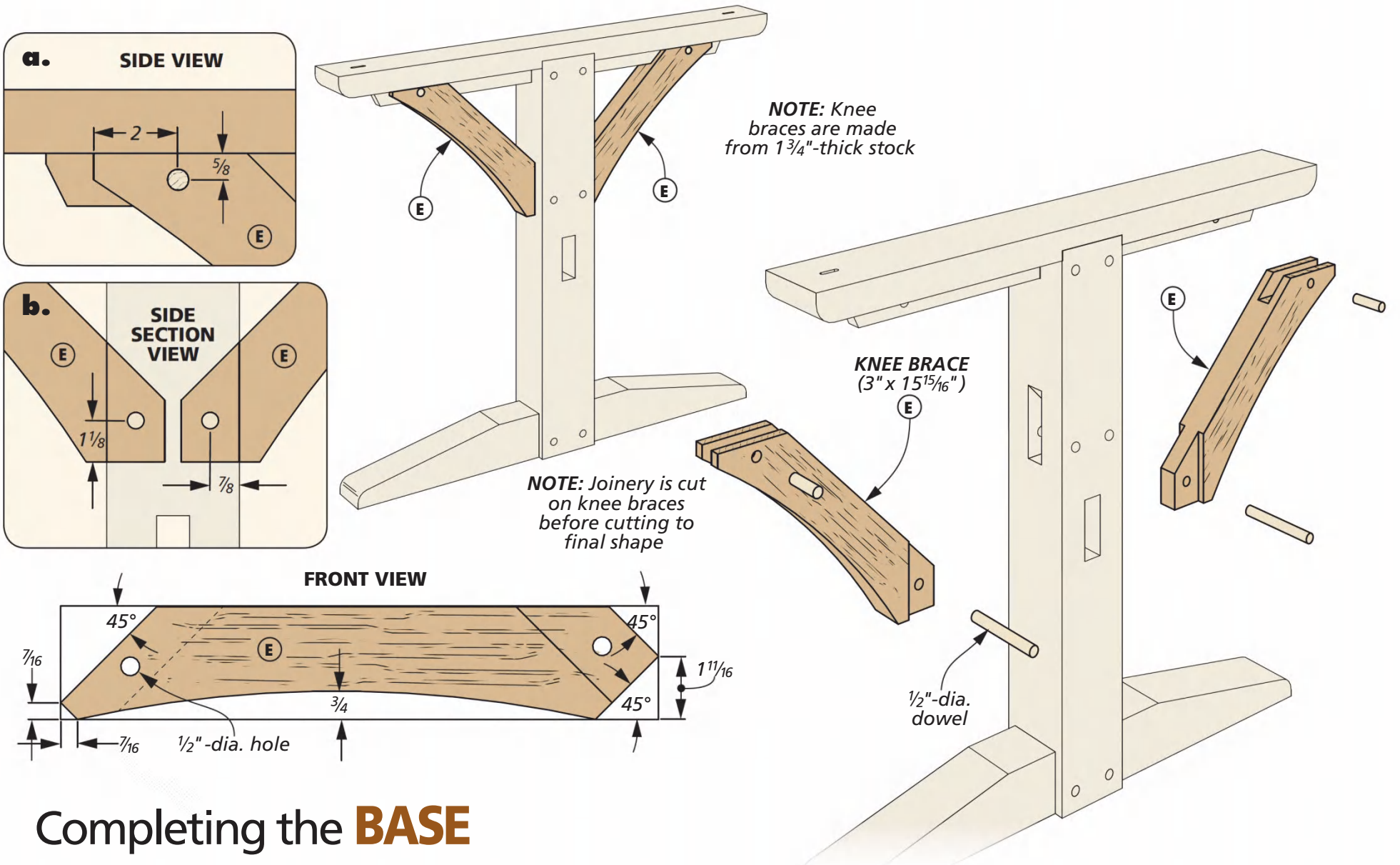


# Completing the **BASE**

With the end assemblies pegged together, you can add a couple of final details. The first is a couple pairs of knee braces. These are a traditional timber frame detail that helps keep structures from racking. Then, we'll wrap up with the stretcher.

**SHAPE FIRST.** After planing some stock to thickness, cut the knee braces to shape. Start by mitering the ends at the miter saw. Or, you could miter them at the table saw with a miter gauge.

Now you're ready to tackle the two connection points. One end of the knee brace has a tenon to fit into the angled mortise on the post. The opposite end has a groove to fit over the connector.

**ANGLED SLED.** For cutting joinery on the ends of angled parts, the table saw is my weapon of choice. The trick is holding the workpiece safely while you're making the cuts. The key here is to use an angled support block. You can see this in Figure 1 at left.

Start by cutting the groove in the top of the braces. Check your progress to ensure a snug fit. Next, using the same sled, cut the tenon on the opposite end. Simply reposition the fence to size the tenon correctly.

With the joinery done, cut the gentle curve at the band saw. Clean up the edges with sandpaper to get a smooth profile. Once this is done, you can glue them in place and install pegs.

## ANGLED SLED

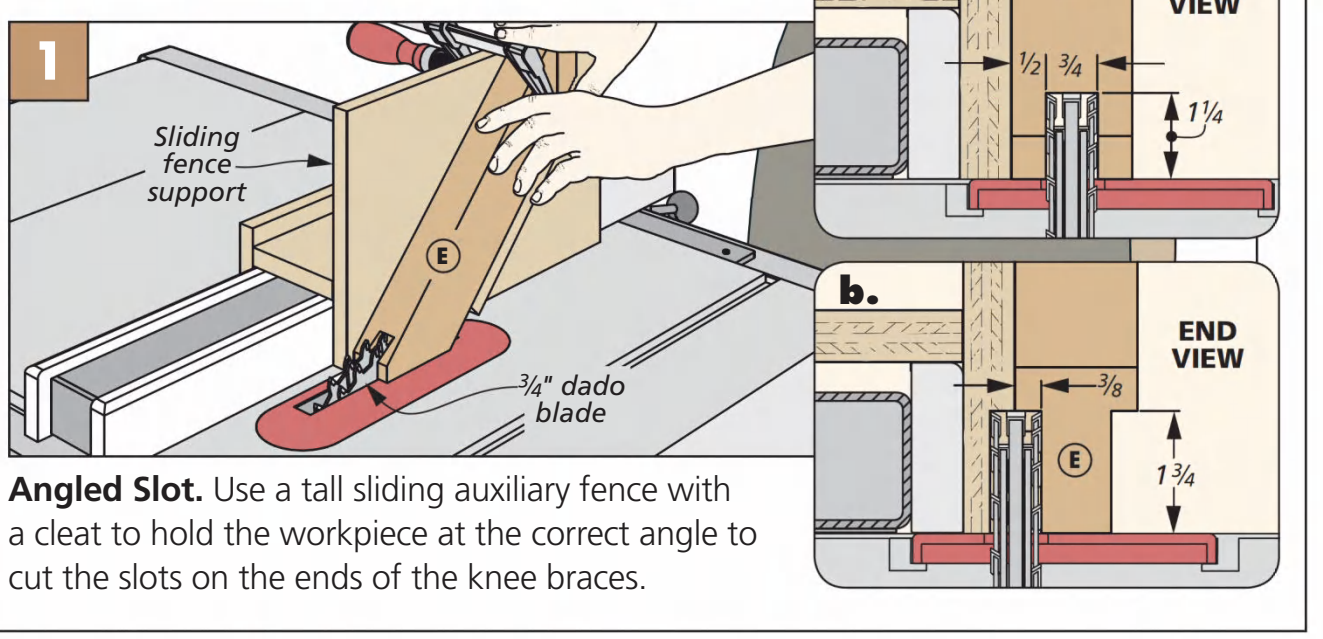


**Angled Slot.** Use a tall sliding auxiliary fence with a cleat to hold the workpiece at the correct angle to cut the slots on the ends of the knee braces.

### STRETCHER

The stretcher that connects the end assemblies looks fairly straightforward. And it is, with one caveat. The tenon on each end is wedged so the table base

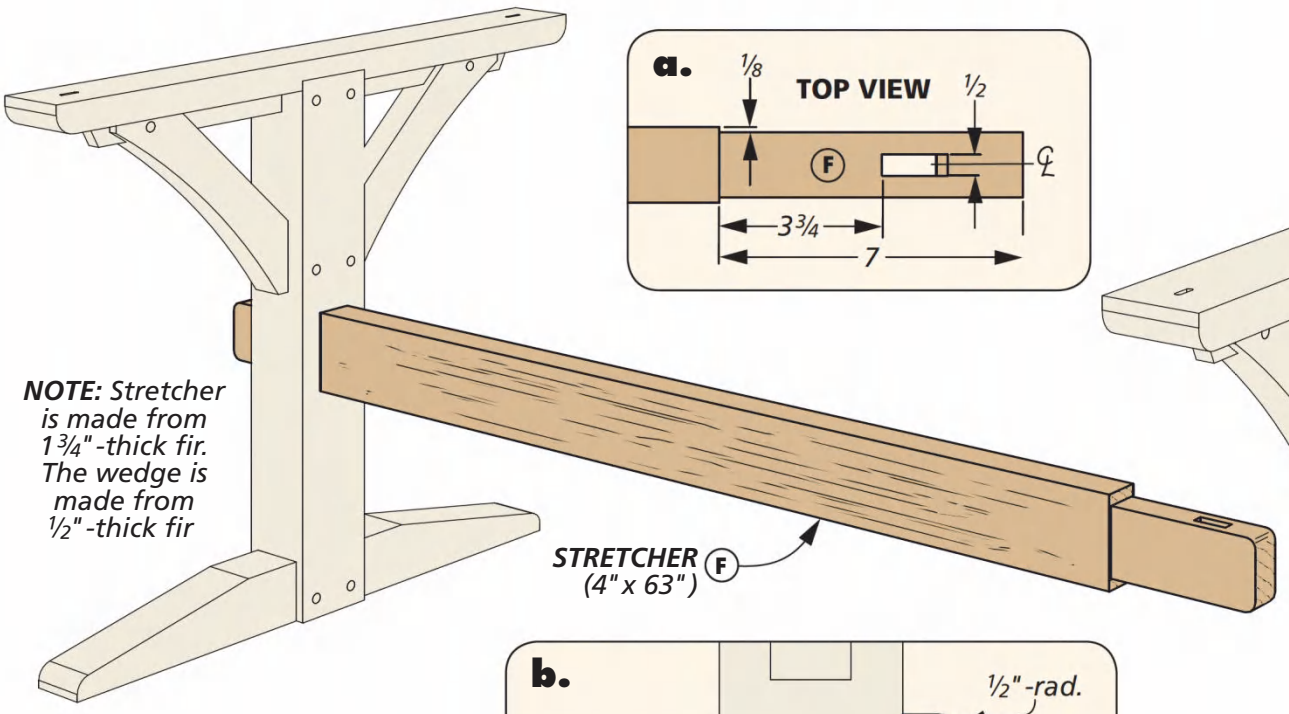


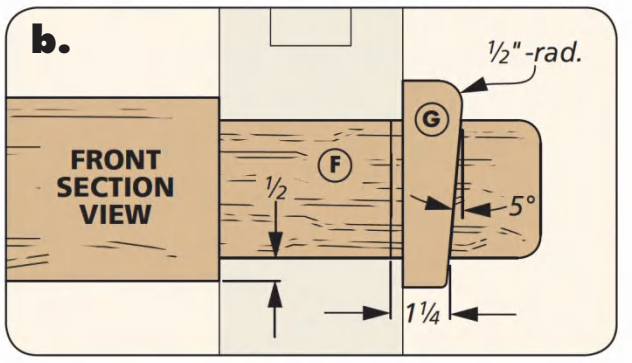


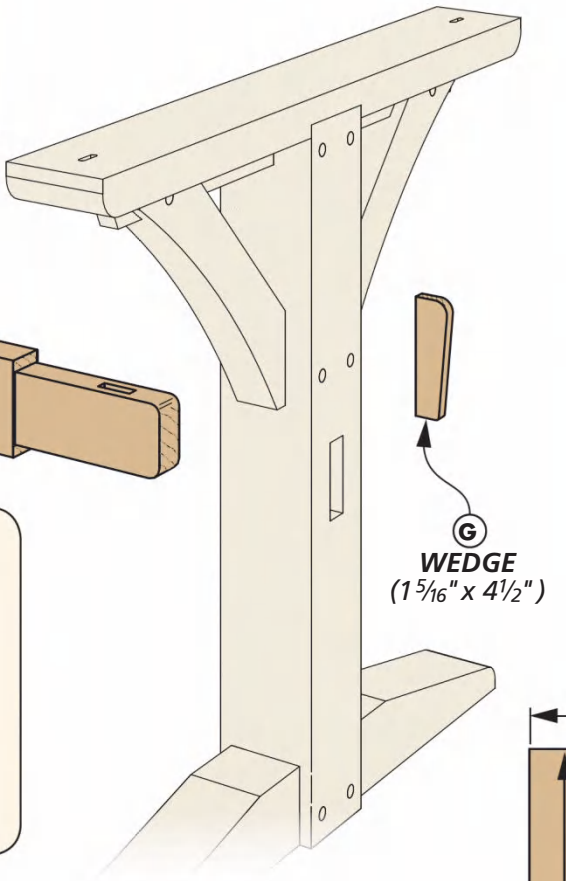


can be knocked down for storage or for moving.

**LONG TENONS.** Cutting the tenons on the ends of the stretcher is the first order of business. This can be done at the table saw, as seen in Figure 1. Use a dado blade and support the workpiece with a long auxiliary fence as you make the cuts. Check the tenons with the mortise as you go. I left mine ever-so-slightly snug and cleaned up the faces with a rabbet block plane for a perfect fit. This has the added benefit of leaving a smooth surface on the visible tenon.

**ANGLED MORTISE.** Like I mentioned, the stretcher is held in place using a wedge. The wedge seats in an angled mortise. To create this angled mortise, you'll want to lay out the mortise on both the top and bottom of the tenon. Then, drill out the waste of the mortise. Make sure to do this from the narrow side of the mortise, which is on the bottom.

Now, you can clean up the edges of the mortise with a chisel and create the angled side. To do this, you'll want to chisel from the remaining layout line on top of the mortise down to the already established opening on the bottom.

**A SMALL WEDGE.** Creating the wedge is the last portion of the base that you need to take care of. This is simply made from stock that has been planed to thickness and cut to shape at the band saw. You can test the fit if you'd like, but don't pound the wedge in yet. You'll want to apply finish to the base before driving the wedge home.

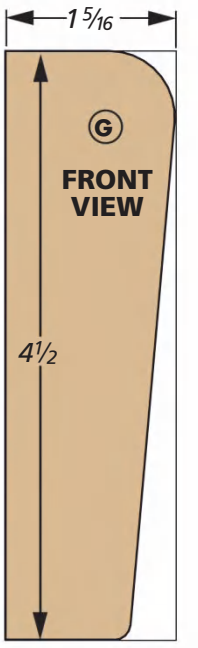


*NOTE: Half-size pattern. Copy at 200% for full-size*

## LONG TENON

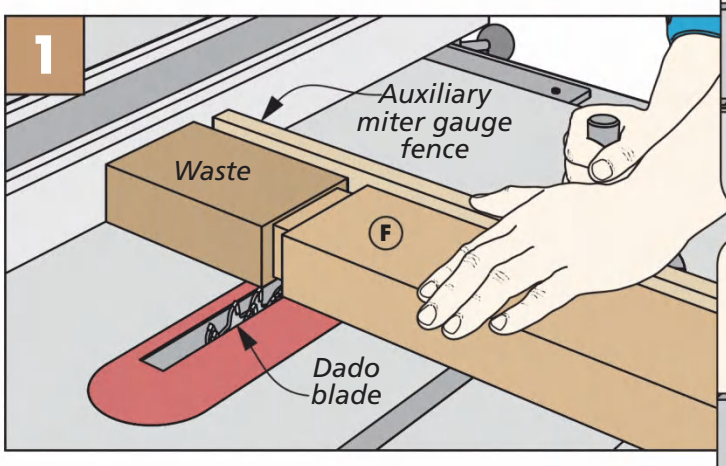


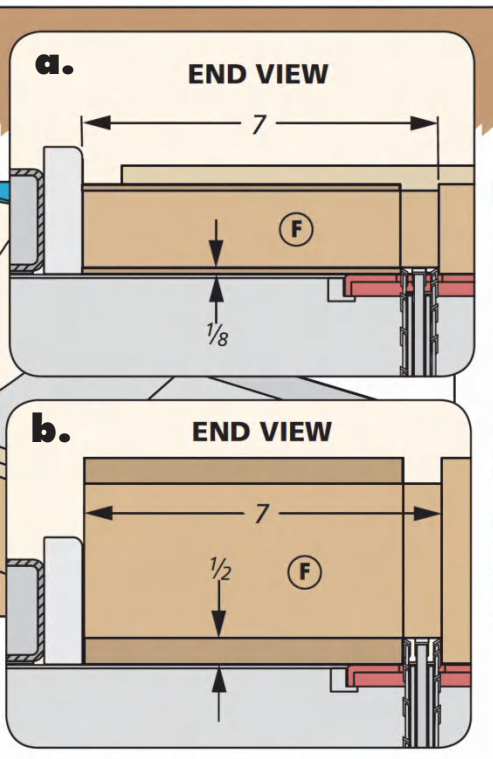


**Long Tenon.** Cut the tenon at the table saw using a dado blade. Use a long auxiliary fence on the miter gauge to guide the workpiece.

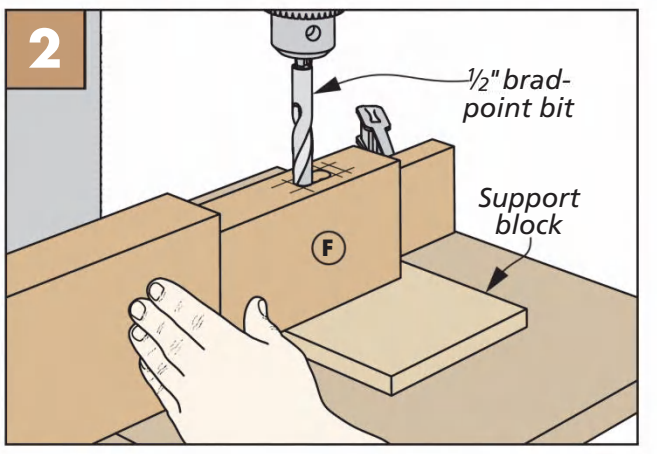


**Drilled Mortise.** Drill out the mortise at the drill press. Then, use a chisel to clean up the mortise and cut the angled wall.

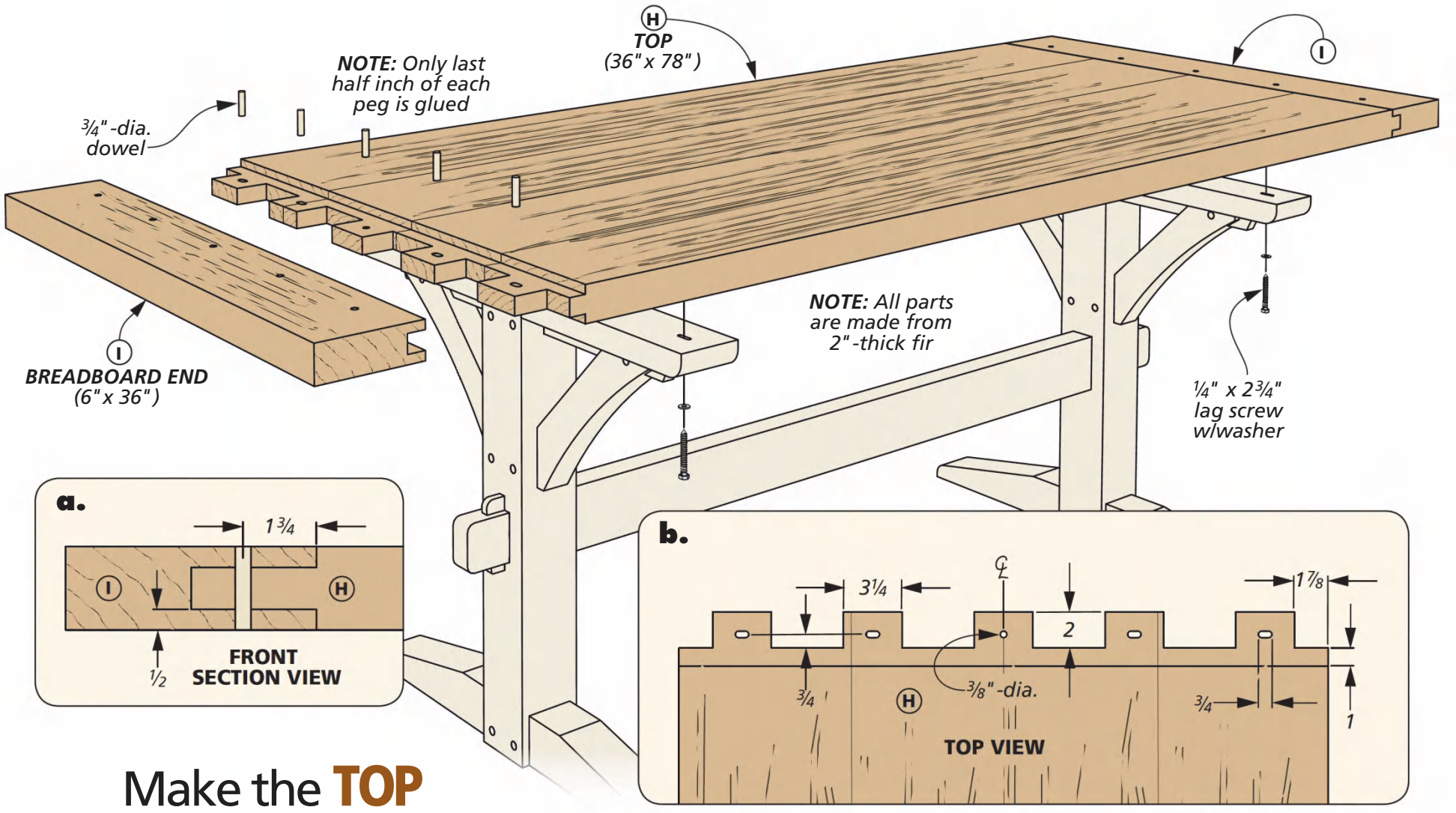


# Make the TOP

The top for this table is made out of the same reclaimed stock as the base. The difference here is that I left the rough, weathered surface on the top and outside edges.

**THREE FLAT SIDES.** Keeping the weathered look on the top takes planning. Because the top is wide, it's glued up from multiple boards. This meant laying out the boards in the orientation that I wanted them in, and then creating straight, square edges to form a good glue joint.

Getting straight edges starts by flattening the bottom face of each board at the jointer. This provides a reference face for creating square edges. Make sure to only joint the edges that will be glued together if you want to keep the rough surface on the edges of the table.

**CAREFUL GLUE UP.** Once the edges are jointed, you can glue the top together. Carefully apply tape to the top faces so that any squeezeout won't run into in the nooks and crannies on the weathered face. When the glue is dry, remove the clamps and trim the top to size.

**BREADBOARD TONGUE.** A breadboard end serves to keep the top flat while allowing it to expand and contract with seasonal changes in humidity. To accomplish this traditional feature, start by defining the shoulders of the tongue with a router and edge guide. Then, remove the waste with the router (Figure 1 on the next page). Next, cut the tenons onto the tongue using a jig saw to remove the waste. You can see this in Figure 2 on the next page.

**BREADBOARD END.** The cap for the breadboard end is made by using a dado blade to cut a groove along the edge and drilling out the deep mortises for the tenons (Figure 3). You can square up the mortises with a chisel. Next, lay out and drill the holes for the pegs. Traditionally, a breadboard end would have a drawbore joint, and if you'd like to read more about the process, see the article on page 58.

After the holes are drilled, you can fit the end in place (glue only the center tenon) and drive a few pegs home (Figure 4). Finally, the top can be attached to the base with lag screws and washers. As far as finish goes, I used a special technique on the base. You can read a little more about that on page 57. Now on to making a bench to go with the table. W

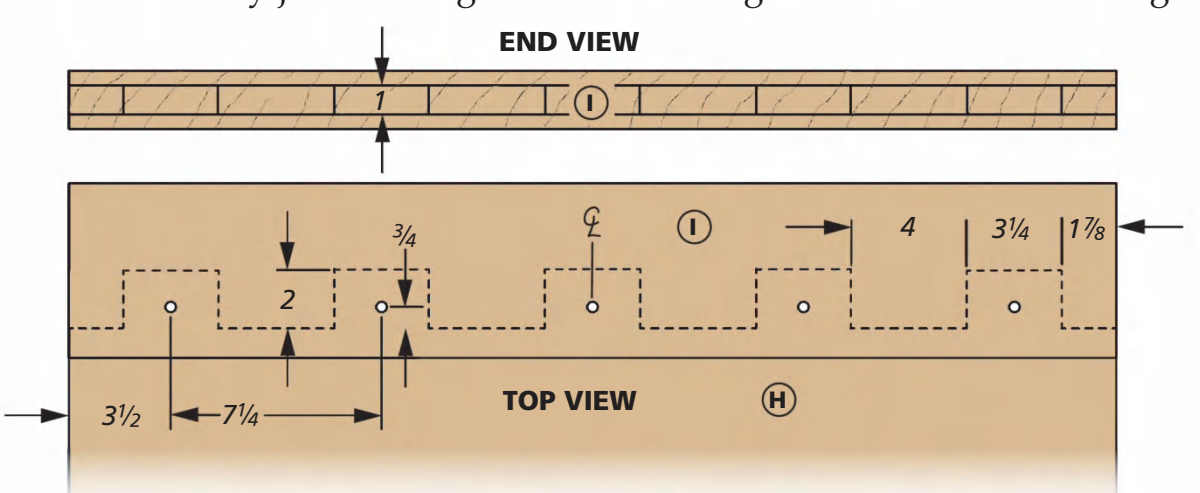

# BREADBOARD ENDS

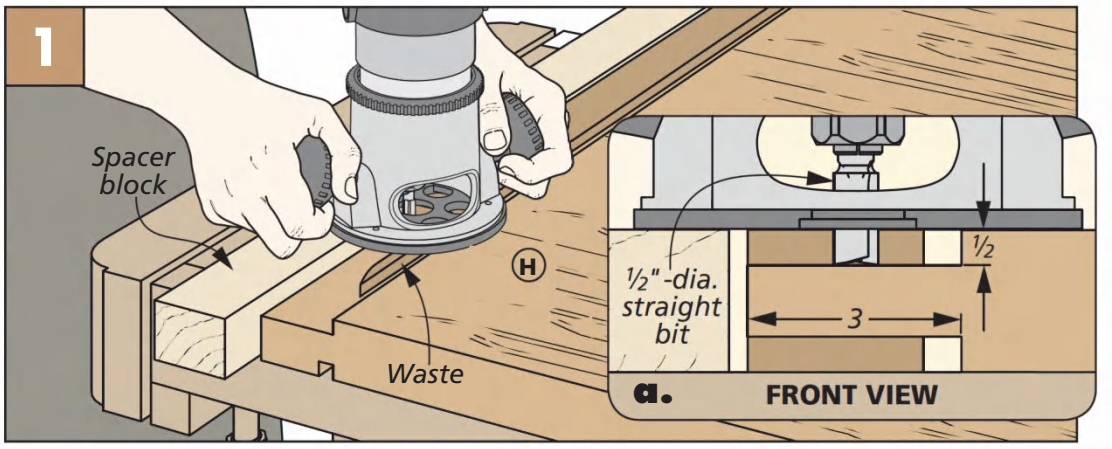


**Breadboard Tongue.** After using a router with an edge guide to define the shoulder of the breadboard tongue, rout away the remaining waste freehand. Use a scrap block to help balance the router.

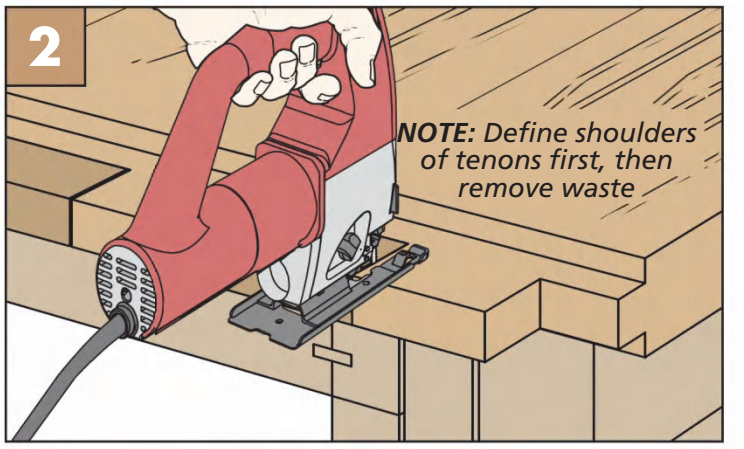


**Cut Tenons.** Using a jig saw, define the edges of the tenons on the tongue, then make sweeping cuts to remove the waste.

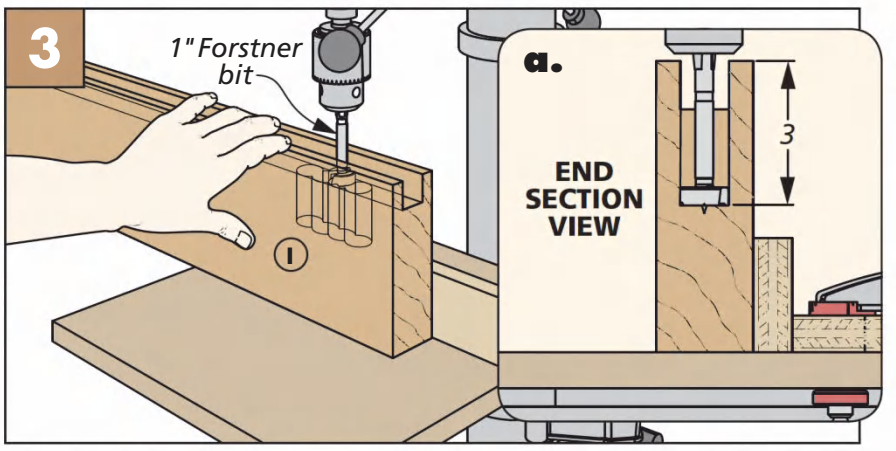


**Deep Mortises.** At the drill press, use a Forstner bit to drill the deep mortises in the breadboard end. Clean and square up the cheeks with a chisel and mallet.

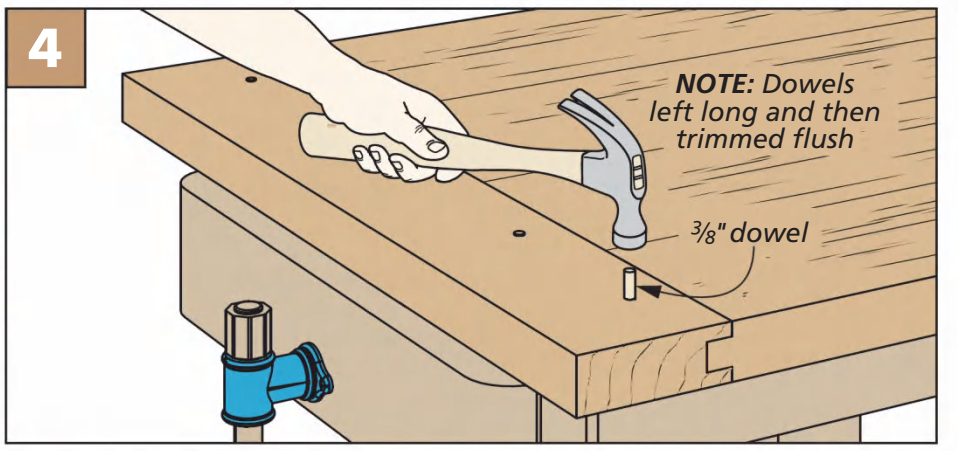


**Pin the Breadboard.** Apply glue to the center most tenon and install the breadboard end. Drive dowels into the breadboard end, locking it in place.

## Materials, Supplies & Cutting Diagram

| | | |
|---|---|---|
| **A** | Feet (2) | 3 x 3 - 30 |
| **B** | Posts (2) | 4 x 4 - 27½ |
| **C** | Caps (2) | 1½ x 4 - 33 |
| **D** | Connectors (2) | ¾ x 2¼ - 27 |
| **E** | Knee Braces (4) | 1¾ x 3 - 15 15/16 |
| **F** | Stretcher (1) | 1¾ x 4 - 63 |
| **G** | Wedges (2) | ½ x 1 5/16 - 4½ |
| **H** | Top (1) | 2 x 36 - 78 |
| **I** | Breadboard Ends (2) | 2 x 6 - 36 |

- (1) ⅜"-dia. x 36" Dowel
- (1) ½"-dia. x 36" Dowel
- (4) ¼" x 2¾" Lag Screws w/Washers

*¾" x 5" - 36" Douglas Fir (1.3 Bd. Ft.)*

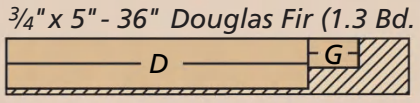


*2" x 6½" - 84" Douglas Fir (7.6 Bd. Ft.)*

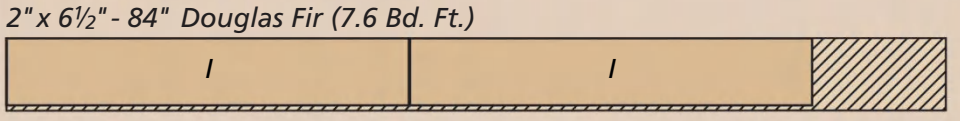


*2" x 6½" - 84" Douglas Fir (Six Boards @ 7.6 Bd. Ft. Each)*

*2" x 4½" - 96" Douglas Fir (Two Boards @ 6.0 Bd. Ft. Each)*

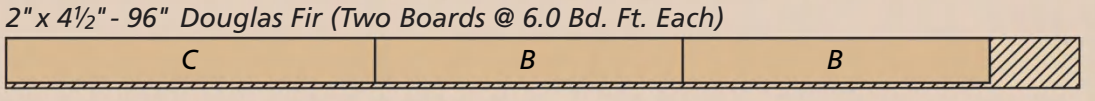


*2" x 6½" - 96" Douglas Fir (8.7 Bd. Ft.)*

*2" x 7½" - 96" Douglas Fir (10.0 Bd. Ft.)*

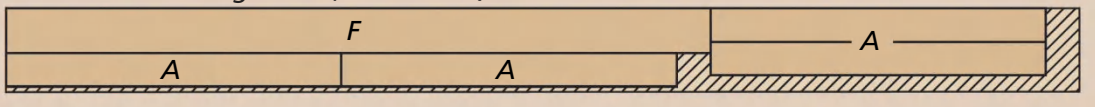

# Dining Bench

This bench is both sturdy and comfortable. It looks great, especially paired with the matching, rustic, farmhouse table.

As nice as the rustic table looks, I wanted a seating option to match. So, I built this bench using the same style as the table. There's nothing new here — a lot of the same techniques you used on the table carry over into this bench.

**FEET UP.** Like the table, I started with the side assemblies first and worked up. That means knocking the feet out is the first matter of business. Here, the feet receive a pair of mortises that will hold the uprights. These are easy to form using a drill press to remove the bulk of the waste, and a little bit of whacking with a chisel and mallet to clean and square them up. Then, cut the foot to shape at the band saw and ease the edges at the router table.

**UPRIGHTS.** The uprights are glued up from two pieces of stock. But, instead of gluing the stock up and then cutting the mortise for the stretcher, I decided to notch each piece of stock before gluing it up to form the mortise. This can be done quickly at the table saw using a dado blade.

Now, you can glue up the two parts. Take your time to make sure the

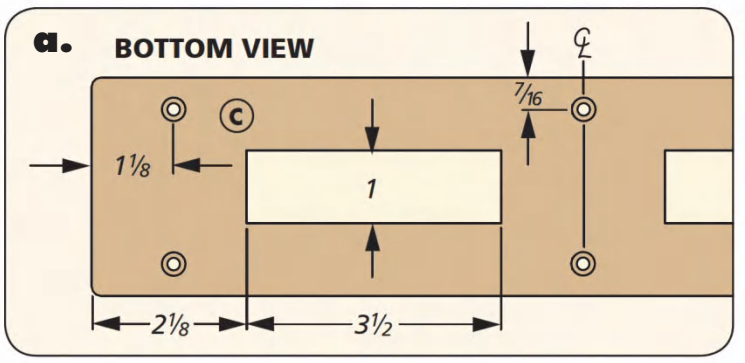


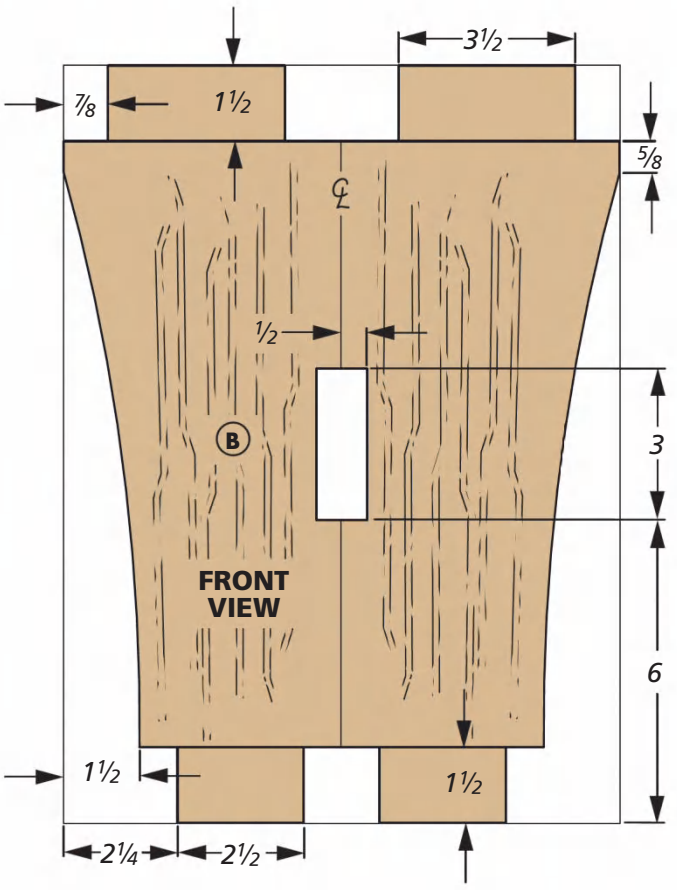


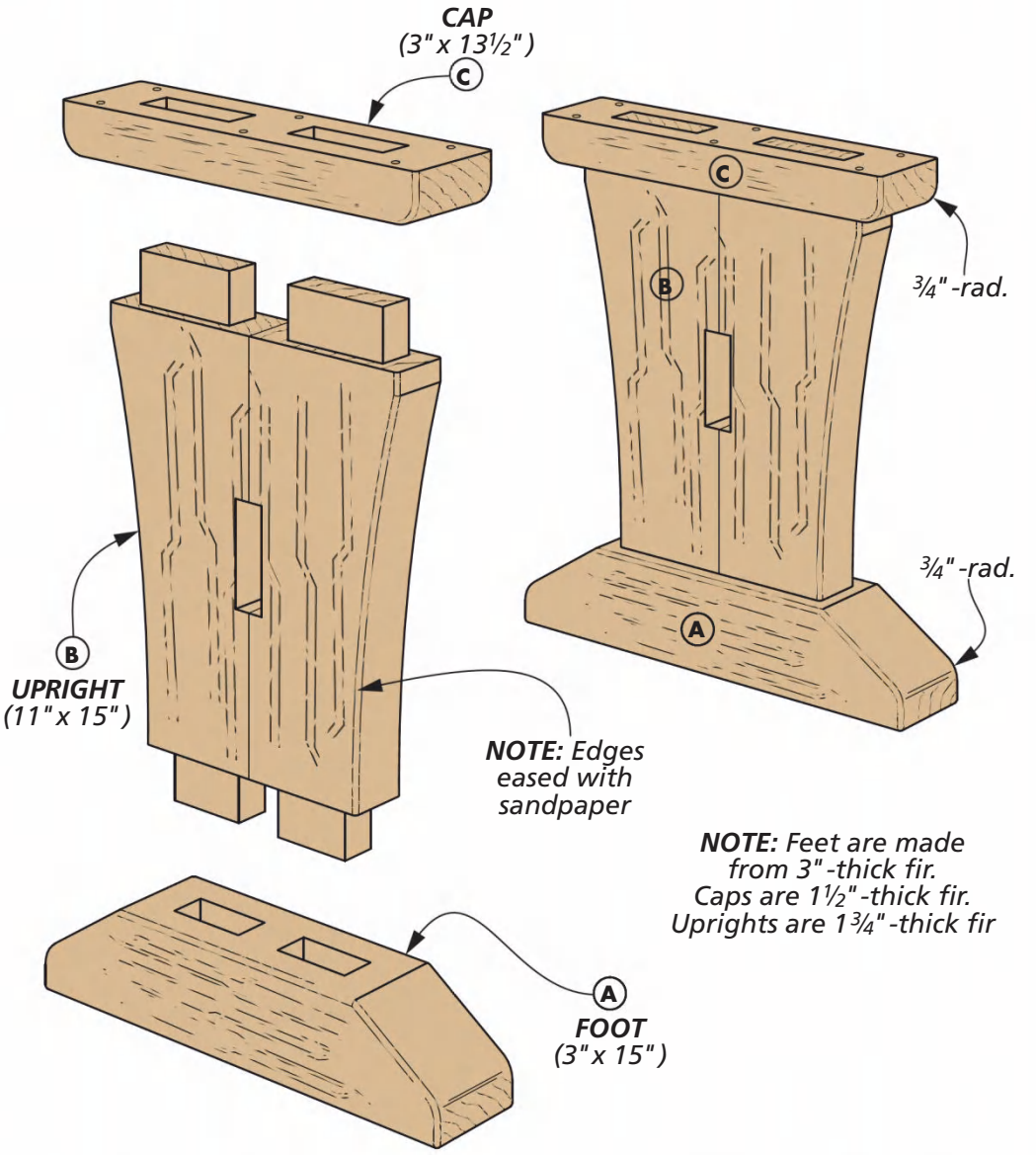


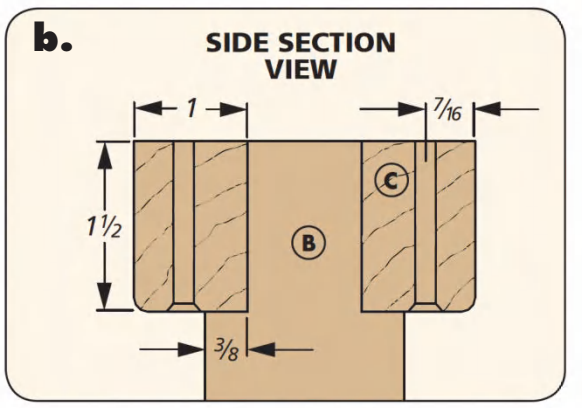


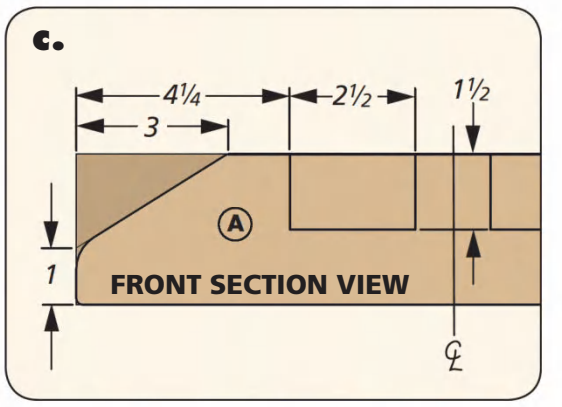


notches match up well. I like to use a scrap block in the mortise to help me keep the halves aligned. Just make sure to apply a coat of paste wax to the block so it doesn't get glued into place.

When the glue has dried, clean up any excess squeeze-out with a scraper then cut the tenons at the table saw. After cutting the gentle curve on the sides at the band saw, gently round over the edges.

**CAP.** The caps are the final parts to make. These have through mortises that are made just like the feet mortises. A little bit of filing and sanding will form the radius on the ends. Take a minute to drill the screw holes that you see in detail 'a' and 'b.' Now the side assemblies can be glued up and set aside while you work on the rest of the bench.

## STRETCHER MORTISE

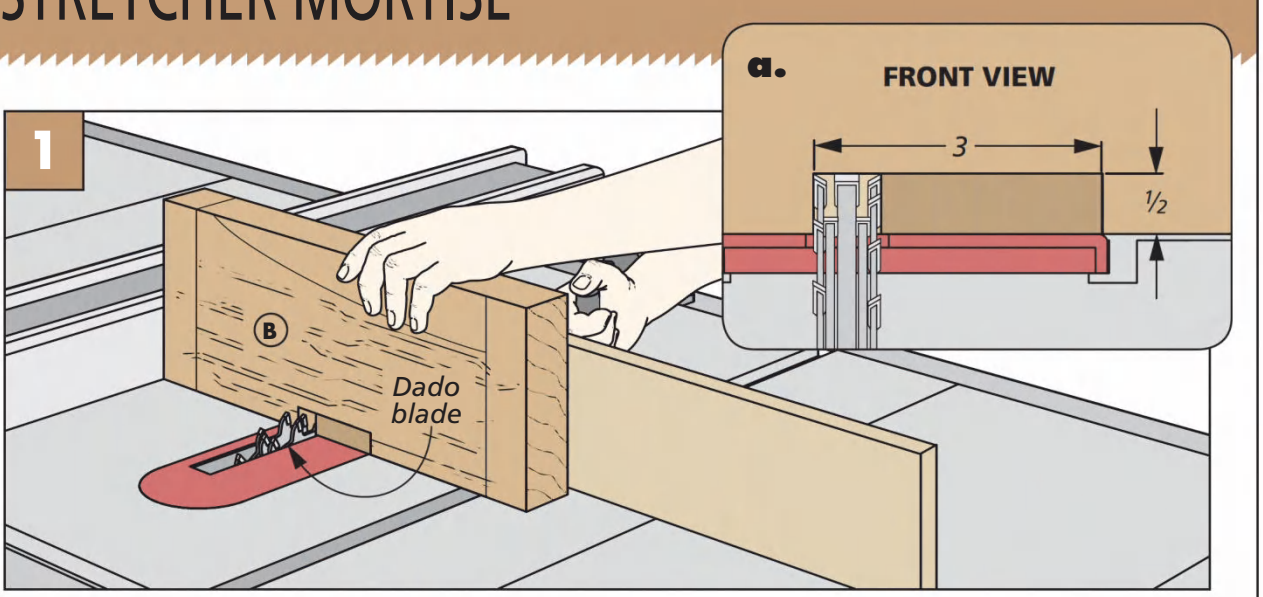


**Two-Part Mortise.** Before gluing up the uprights, cut a notch on the inside edge of each half using a dado blade at the table saw. These notches will become the mortises for the tenon on the stretcher that you'll make later.

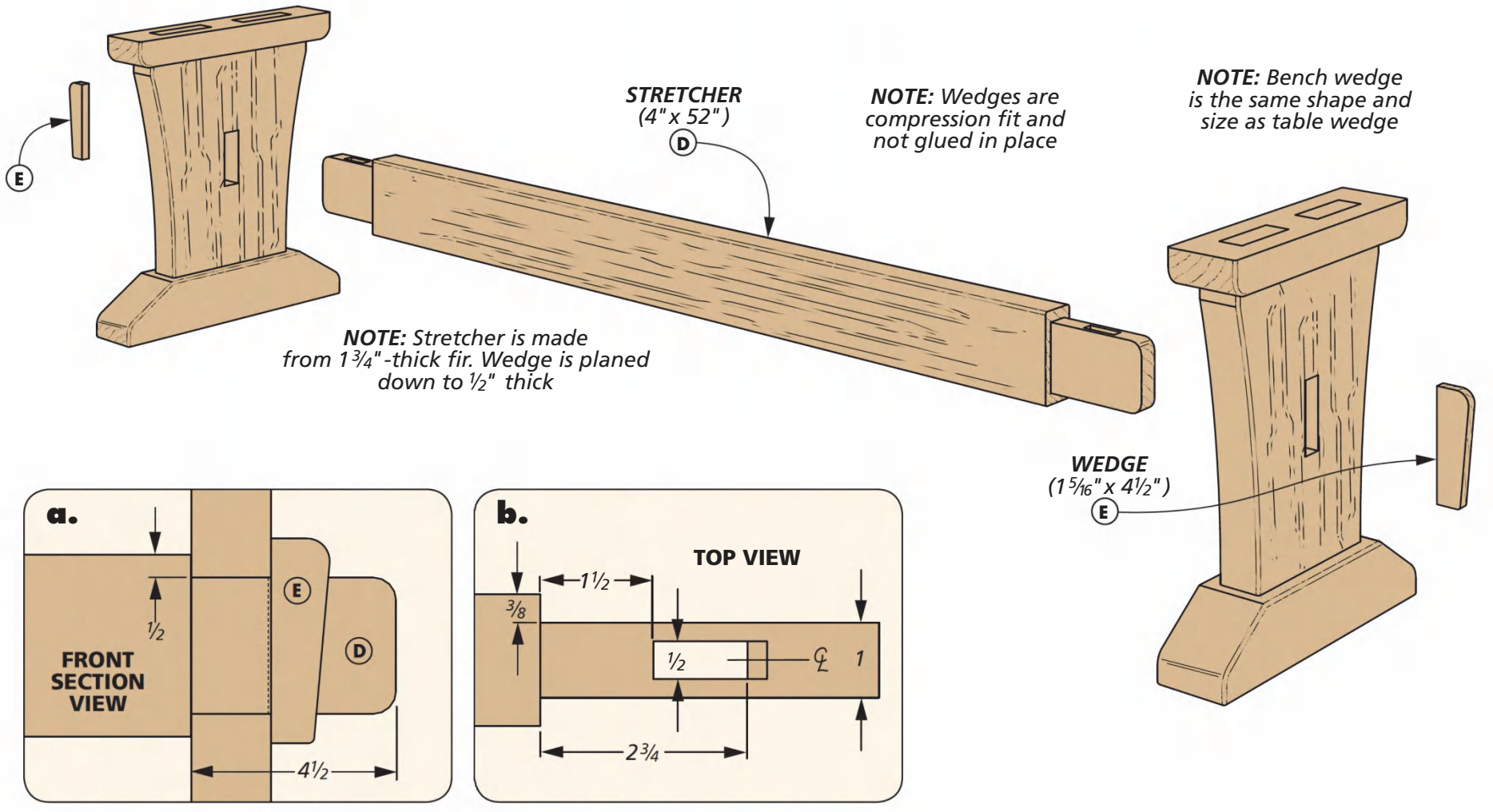


# Completing the **BENCH**

The side assemblies are connected by, you guessed it, a long stretcher that matches the table. There's no secret here. The stretcher is identical to the table base stretcher, except that it's a little shorter.

**A SMALLER TOP.** The seat for the bench mimics the top on the table. Here again, it's made out of a couple of boards glued together to create a wider seat. For the seat however, I didn't figure it would be too comfortable to sit on weathered wood. So, I took a little more traditional route and surfaced the stock before gluing it up.

Once the glue on the seat was dry, I tackled the tongue and tenons for the breadboard ends. Here I took a different approach than the table top — instead of using a router to make the tongues on the ends, I used a sled on my table saw paired with a dado blade. This made it quick and easy to cut one cheek of the tongue before flipping the stock over to finish it out. This was repeated on the other end of the seat.

**BREAK OUT THE HANDSAW.** At this point of the project, I was feeling the itch to break out some hand tools. So, to form the tenons I decided to use a combination of hand and coping saws to cut the tenons. The breadboard ends are a great place to practice, because this is the ultimate in function before form. The tenons are hidden when the bench is done, so if you're hand sawing isn't up to snuff, it's okay.

Topping off the end of the bench is a mini version of the breadboard end I made for the table top. Like the table version, it's glued onto the middle tenon and then pegged in place. The last thing to do before applying a finish is to attach the seat with some screws through the caps into the seat.

## A DIFFERENT FINISH

To blend the base and bench with the weathered table top, I chose to use a tool that you might not think of — a propane torch.

**MEDIUM RARE.** Using fire to finish wood isn't new. For generations, Japanese craftsmen have scorched wood until it turns black— a technique known as *Shou Sugi Ban*. However, I didn't want something that dark. I wanted more of a medium-rare instead of well-done.

If this is a technique you want to try, use a scrap piece first to get the feel. A few fast passes with the torch will quickly toast the grain and make a nice contrast. When you're happy with the look, you can apply your choice of topcoat.

The finish I chose was spray lacquer. I used a couple of coats on the table base and bench and a few extra on the top itself. This was to make sure to seal the wood and smooth out any areas where food might get stuck. W

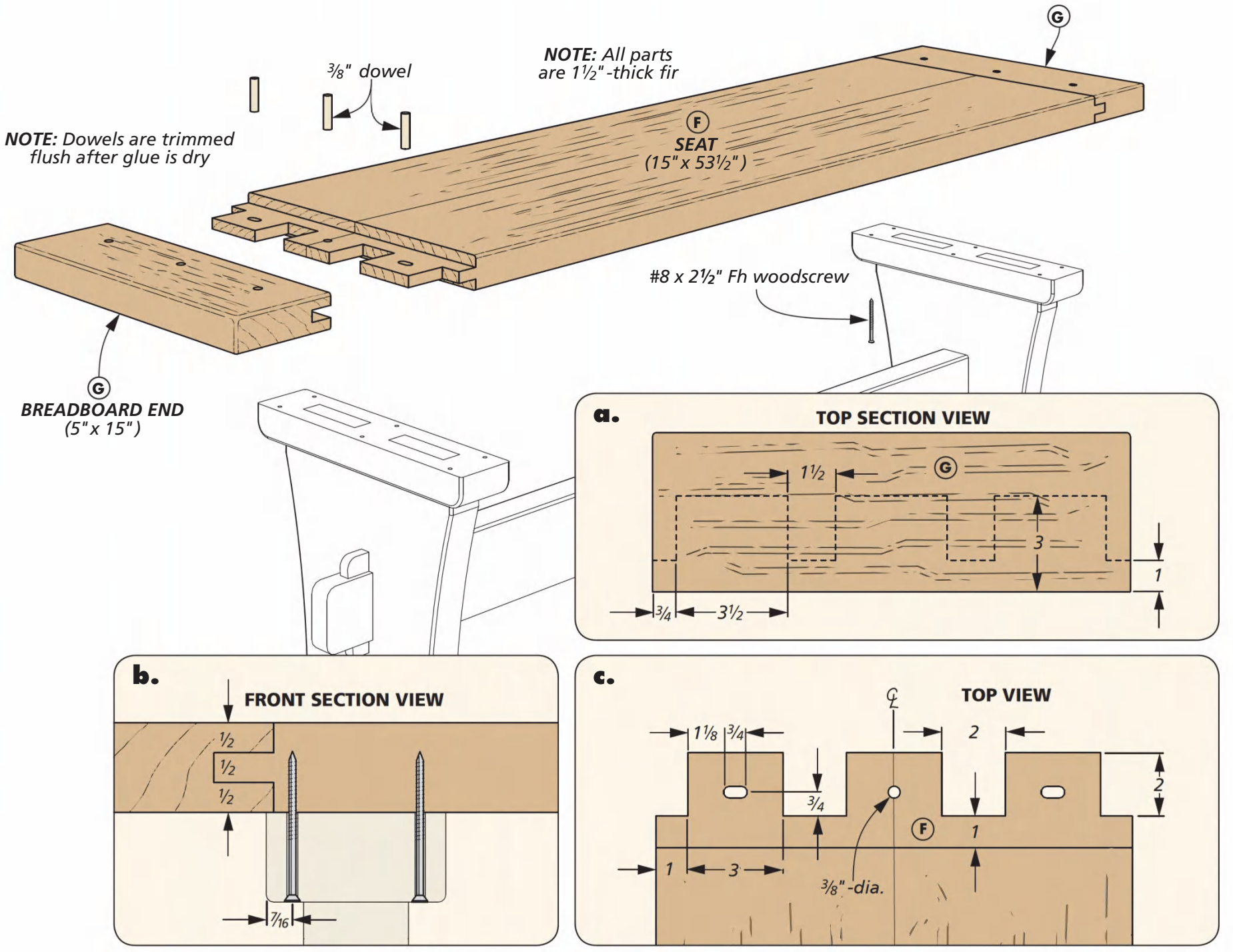


## Materials, Supplies & Cutting Diagram

| | | |
|---|---|---|
| **A** | Feet (2) | 3 x 3 - 15 |
| **B** | Uprights (2) | 1¾ x 11 - 15 |
| **C** | Caps (2) | 1½ x 3 - 13½ |
| **D** | Stretcher (1) | 1¾ x 4 - 52 |
| **E** | Wedges (2) | ½ x 1⁵⁄₁₆ - 4½ |
| **F** | Seat (1) | 1½ x 15 - 53½ |
| **G** | Breadboard Ends (2) | 1½ x 5 - 15 |

- (1) ⅜"-dia. x 36" Dowel
- (12) #8 x 2½" Fh Woodscrews

*2" x 4½" - 60" Douglas Fir (3.8 Bd. Ft.)*

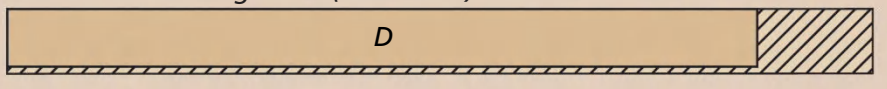


*2" x 8" - 96" Douglas Fir (7.3 Bd. Ft.)*

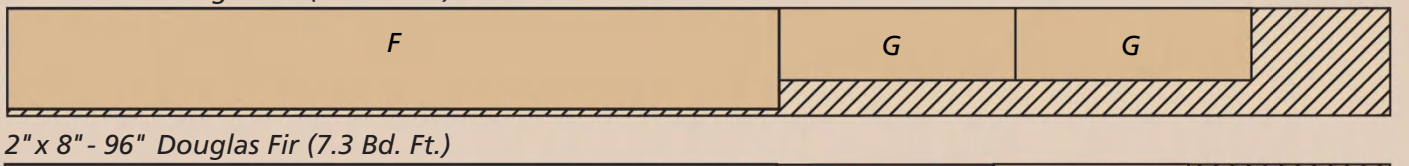


*2" x 8" - 96" Douglas Fir (7.3 Bd. Ft.)*

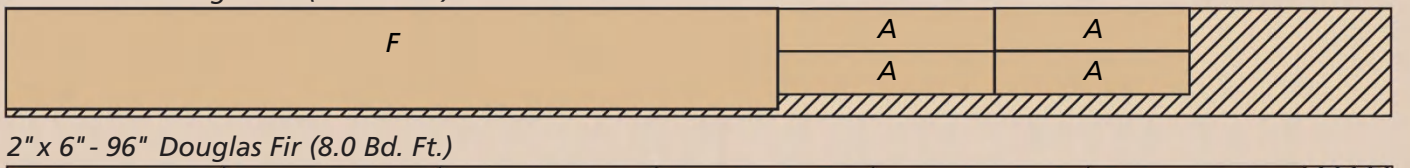


*2" x 6" - 96" Douglas Fir (8.0 Bd. Ft.)*

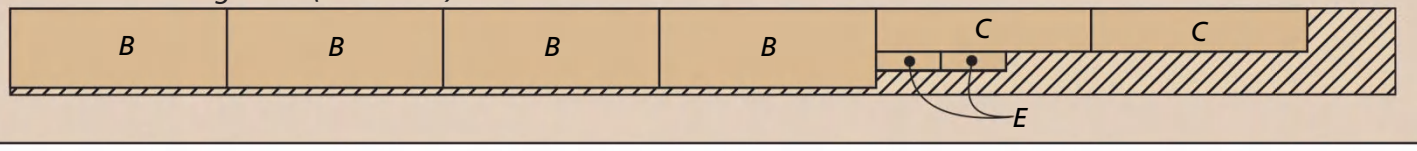

# Drawbore Joinery

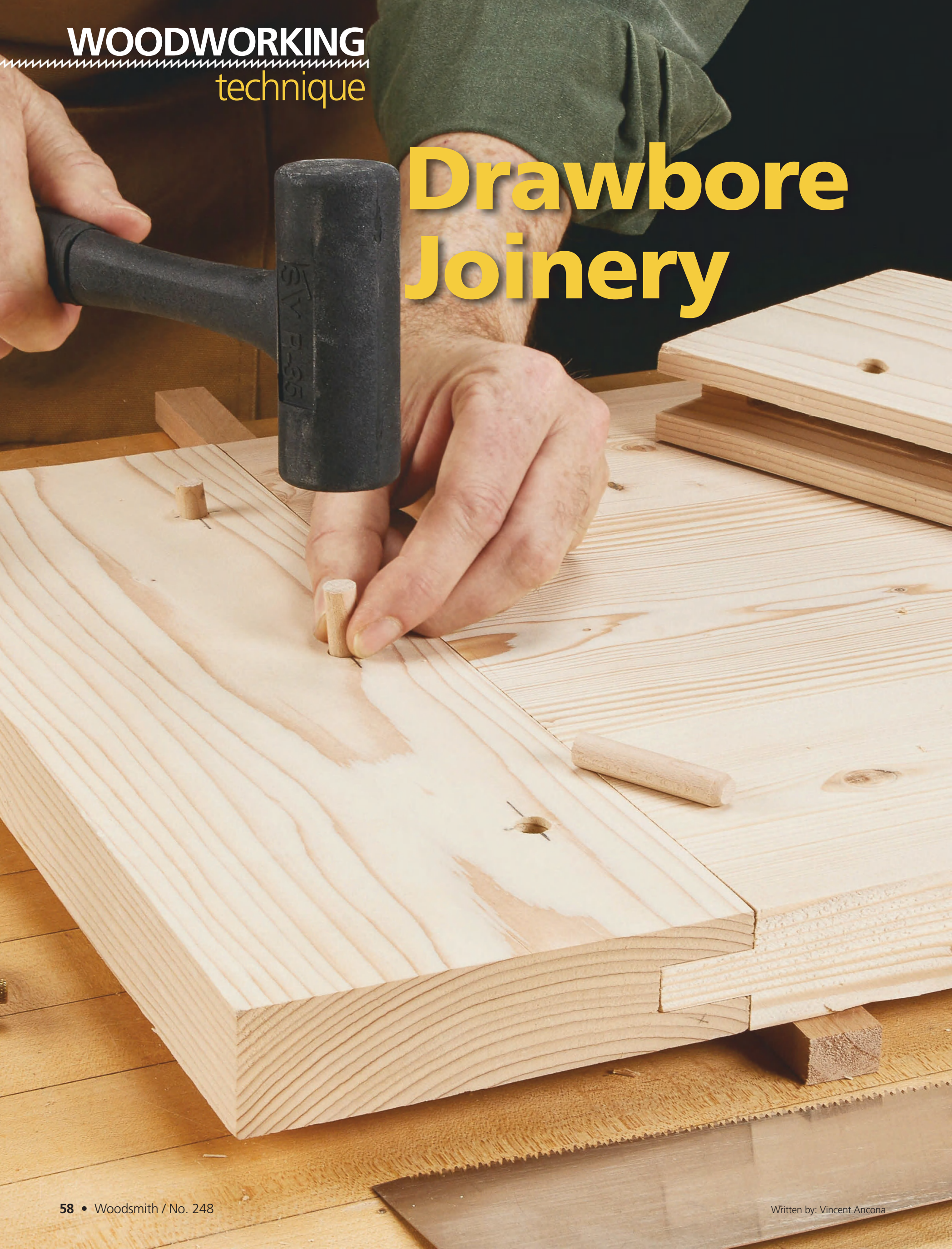

Written by: Vincent Ancona

Sometimes the oldest ideas are also among the best. That's certainly the case with drawbore joinery. This technique dates back to at least the 17th century, if not earlier. It's been used in furniture, wooden ships, and timber frame buildings. And despite its simplicity, it's still hard to beat for a long-lasting joint.

Drawbore joinery is used in conjunction with mortise and tenon joints. The concept is simple. Slightly offset holes are drilled through both the mortise and the tenon. Then a wood peg or pin is driven through the holes, drawing the pieces together tightly and locking the joint in place without the use of glue. This mechanical connection is much less prone to failure over time than a glued joint would be.

There are basically three steps to a drawbore joint — drilling holes in the mortise, marking and drilling offset holes in the tenon, and then driving pins through the joint. But before you can begin on any of these, you need to consider the size and location of the drawbore holes, as well as the quantity.

**SIZE.** The size of the holes (and corresponding pins) is usually dictated by the scale of the project and the size of the mortise and tenon joints. For most furniture projects, I typically use pins that are ¼" or 5/16" in diameter. For larger projects (such as the dining table in this issue), I may go up to ⅜" or ½"-dia.

**LOCATION.** More important than the diameter of the hole is the location. You don't want to position the holes too close to the edges of the tenon or you risk splitting the wood.

As a rule of thumb, the distance between the hole and the edge of the tenon should be at least twice the diameter of the hole (detail 'a' below).

You also want to avoid placing the holes too close to the end of the tenon, or the edge of the mortise. I generally aim to keep the holes within the middle third of the tenon length.

**QUANTITY.** For narrow tenons, a single drawbore pin is usually sufficient. On tenons wider than three inches, you may want to use a couple of pins.

There's one other point worth mentioning. Because a drawbore joint actually pulls the tenon tightly into the mortise, you'll want to make sure that you have some clearance between the end of the tenon and the bottom of the mortise.

▲ The drawbore pins pull both halves of a mortise and tenon joint together tightly.

## THE MORTISE

Once you've determined the size, spacing, and number of holes, mark them out on the face of your mortised workpiece. Now you're ready to drill through the walls of the mortise. You can do this at the drill press, as shown in Figure 1, or with a hand drill.

There's not much to this step. Simply drill all the way through the mortise, using a backer block to prevent splintering where the drill bit exits the workpiece. Then it's on to the tenon.

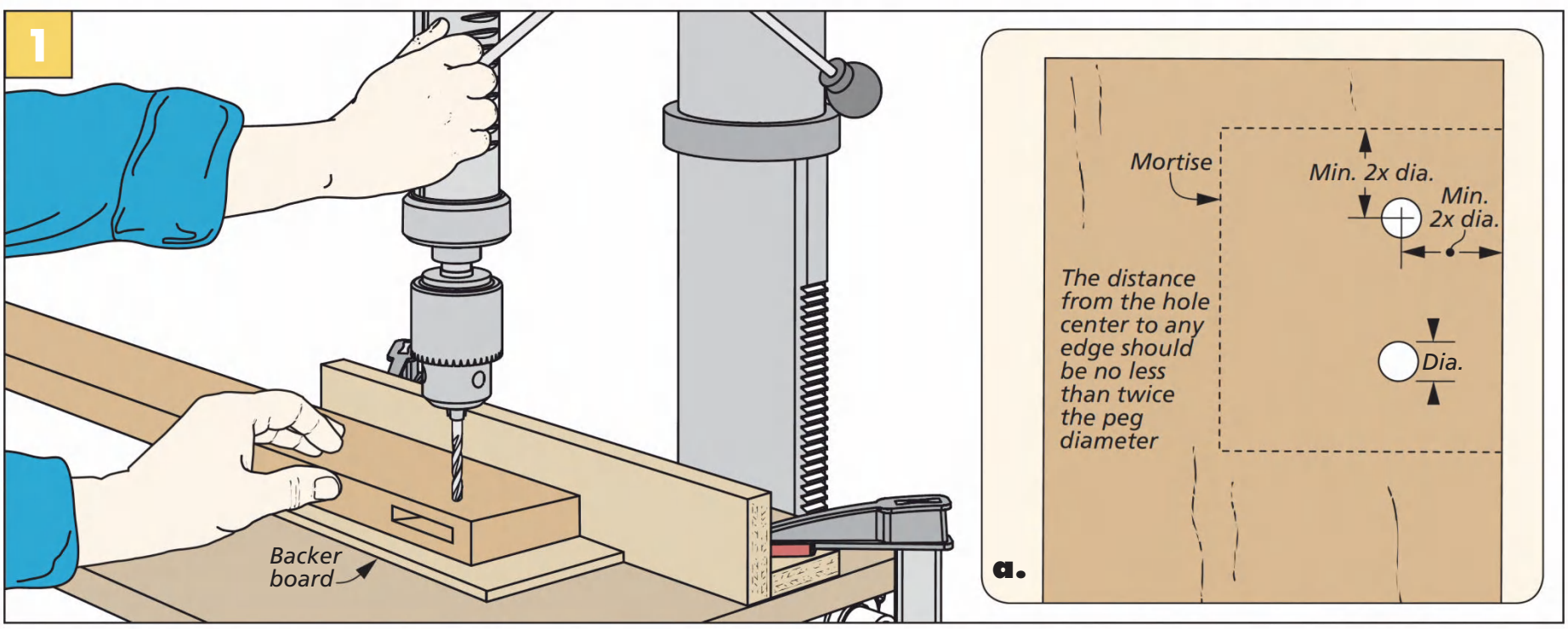


**Mortise Holes.** Lay out the hole locations on the face of your mortised workpiece, making sure that they aren't positioned too close to the edges of the tenon (detail 'a'). Then drill through both walls of the mortise. A backer board underneath the workpiece will help prevent tearout where the drill bit exits the workpiece.

Illustrations: Bob Zimmerman

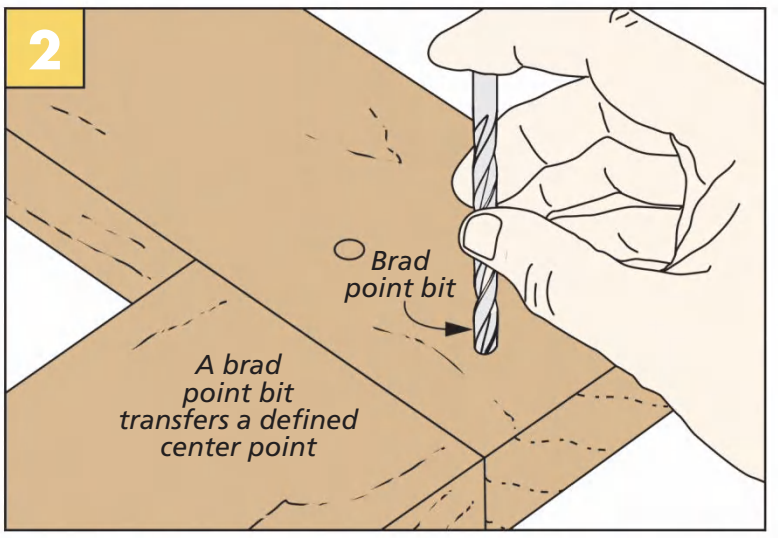


**Transfer Hole Locations.** To transfer the hole locations, clamp the joint up and use a drill bit to mark the hole center locations on the tenon.

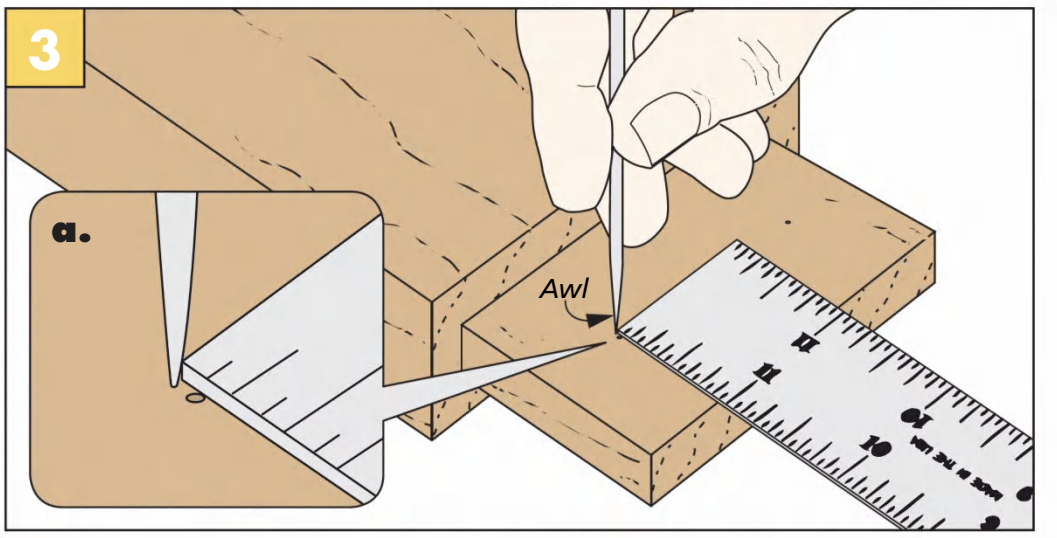


**Create Offset.** Using the transferred hole locations as your starting point, lay out the offset holes on the tenon. The holes in the tenon should be offset 1/16" to 1/8" from the holes in the mortise.

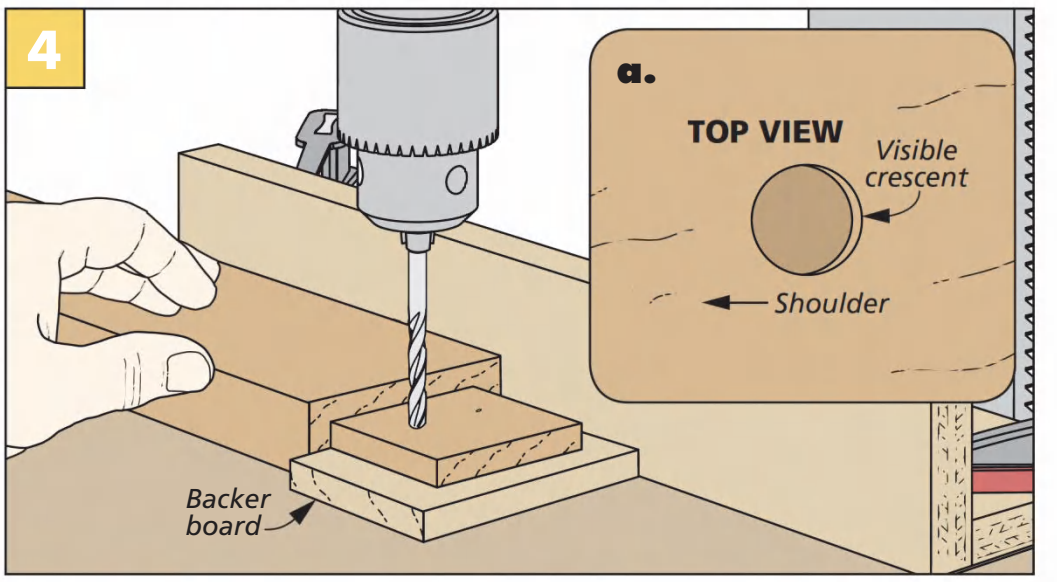


**Drill Holes.** After drilling the offset holes through the tenon, reassemble the joint to examine the holes. You should see a small crescent where the holes overlap (detail 'a').

## THE TENON

With the holes in the mortise complete, the next step is to transfer their location to the tenon. To do this, simply slip the tenon into the mortise and mark the hole locations using a drill bit, as you see in Figure 2.

**CREATE THE OFFSET.** Of course, if you were to drill the holes through the tenon exactly where you marked them, the pins wouldn't really do anything to pull the pieces together. In order to achieve this, the holes in the tenon need to be slightly offset toward the shoulder of the workpiece.

The amount of offset is important. Too little and the pin may work itself loose over time. Too much, and you risk splitting one or both of the parts.

For hardwoods, I find that an offset of 1/16" to 3/32" is about right. For softwoods like pine, or for larger scale drawbore joints, you can increase the offset a bit. But I wouldn't suggest going beyond 1/8".

If you're unsure of how much offset to use, it's a good idea to make a test joint out of a couple of pieces of scrap wood to get a feel for how the joint will go together. Trust me, nothing is more frustrating than to have workpieces split when you drive the pins in place.

Once you've determined the amount of offset to use, lay out the hole locations on the tenons, as shown in Figure 3. Then you're ready to start drilling.

After laying out the holes, you can drill them using a hand drill or a drill press. I find it helpful to support the workpiece by placing a scrap block underneath the tenon. This also prevents tearout as the bit exits the hole.

Before moving on to the pins, reinsert the tenon into the mortise and take a look at the holes. You should see a crescent-shaped sliver of wood where the two holes overlap (Figure 4a).

## MAKING THE PIN

The final component of a drawbore joint is the pin. You have a couple options here. Although you can use commercially made dowels, I find that a lot of dowels are either not round or are not accurately sized.

So instead, I prefer to make my own pins. This has the added benefit of a closer color and grain match, since I make the pins out of the same stock that I use to build the project.

**DOWEL PLATE.** I make my pins using a dowel plate, which is nothing more than a piece of steel with a row of progressively smaller holes. You can purchase commercial dowel plates, or make your own out of a piece of steel (see box on next page).

To make a pin with a dowel plate, you start by cutting an oversize square blank for the pin. Then drive it through progressively smaller holes until

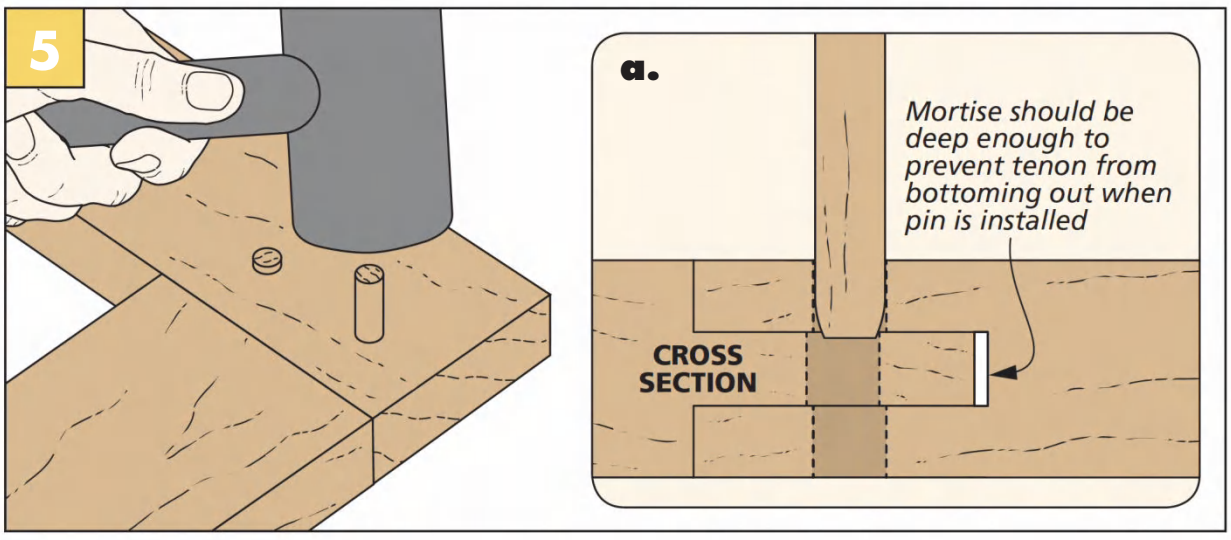


**Drive Pins Through Joint.** Sand or file a slight taper or chamfer on the ends of the pins to make it easier to drive them in place. Use a mallet to drive the pins through the holes. Then trim the ends of the pins flush with the surface.

Chamfer the end of the pin and apply a little beeswax to help it slide into place easier while driving it through the joint.

you reach the required diameter. Chamfering each end of the blank makes it easier to drive the stock through the plate. You can do this with a disc or belt sander, or even a pencil sharpener if you have one nearby. You'll also want to make sure the ends are chamfered before inserting the pins into the joint.

**DRIVE IT HOME.** With the finished pins in hand, you're ready to assemble the joint. Drawbore joints are traditionally assembled dry. However, some woodworkers opt for a belt-and-suspenders approach and apply glue to the pins before driving them in.

While I don't personally use glue on my drawbore joints, I find that it does help to rub a little beeswax or paraffin wax on the pins so they slide easier (photo above). Then assemble the joint and drive the pins through the holes with a mallet.

You'll want to make sure the pin passes all the way through the joint. The chamfer on the end of the pin helps it to navigate the slightly irregular path of the offset holes, as shown in Figure 5a.

Once the pins are driven through their respective holes, you can trim them flush with a hand saw or chisel. Depending on the look of your project, you may even want to leave them standing just a bit proud. Either way, at this point, the drawbore joint is complete.

Drawbore joinery is a technique that's fairly easy to master and has the advantage of standing the test of time. It may not be something you'll use on every project, but it adds a traditional, hand-crafted touch. W

## SHOP-MADE DOWEL PLATE

To make your own dowel plate, drill a series of holes in 1/32" increments through a piece of 1/8"-thick steel. Start by driving the dowel blank through the hole that's closest in diameter to your stock. (Place the dowel plate over a doghole or the open jaws of your bench vise to provide clearance.)

After the first pass, pound the dowel stock though the next smaller size hole. Keep moving through progressively smaller holes until you reach the desired diameter for your pins.

You can make your own dowel plate out of a piece of 1/8"-thick steel bar stock.

To make your own dowels, simply drive the dowel stock through progressively smaller holes until you reach your intended diameter.

# Flattening Large Surfaces

While I always look forward to the completion of a project, there are certain milestones along the way that can bring almost as much satisfaction. One of those is creating a smooth, flat solid-wood panel. Whether it's a tabletop or case piece, the top often becomes a focal point. So you want it to look its best.

From a woodworking point of view, the attention often seems to center around sanding and finishing. The reality is that to end up with a flat, smooth panel, the process begins way before that step.



Written by: Phil Huber

I've found it helpful to divide the process into three stages: preparing, flattening, and smoothing. For each stage, there are a range of tools to consider that will help achieve the goals you're after. So on the next few pages, I'll take a tour through the shop to help you select the best tool for each step of the journey.

## PREPARING THE PANEL

The starting point of a flat panel is at the lumberyard and requires few tools beyond your eyes. Of course, the boards should look good to you, but you need to look at their condition.

Sight down the face and edge of each board looking for cupping, bowing, or twist. These can play havoc with your ability to create a flat panel. Being a natural product, finding perfectly flat and straight material isn't always possible. So try to find the boards with the fewest defects but still suit your needs.

**STRAIGHT, FLAT & SQUARE.** Back in your workshop, it's time to talk tools. For the individual boards to become a single panel, the faces need to be flattened and the edges need to be square.

How you go about this depends on the tools you have and the amount of physical effort you want to devote. The standard approach in the era of power tools is to use a jointer to flatten one face and straighten one edge. A thickness planer brings boards to a consistent thickness with parallel faces. Finally, the table saw steps in to rip the board to width and parallel to the jointed edge.

**FACES.** The lower left photo shows flattening the face of a board with a jointer. The key is having a jointer that's wide enough to match the boards you get. However, wide jointers are pricey and take up more shop space than smaller models.

Another route to take is to use a thickness planer for flattening. You can see this in the lower right photo. The workpiece rides on a sled. Shims provide support for gaps caused by twist.

This is the approach I take in my home shop. I don't have room for a jointer. So, I try to get as much as I can from other tools.

**EDGES.** When it comes to edges, the jointer is (once again) the place to start. And for sheer efficiency, it's tough to beat. Running a workpiece with the flat face against the fence while moving it across the cutterhead, you can quickly create a straight, square edge. Before power jointers, woodworkers used hand planes to do the same task.

**THICKNESS.** While hand planes can be used to bring boards to final thickness, it's physically demanding work. That's just one reason I consider a thickness planer an essential tool for furniture making.

**GLUEUP.** No matter which tools you use, straight edges and flat consistent boards simplify the gluing process. As we'll see, this investment saves a lot of time and effort down the road.

Good stock preparation allows you to get tight and level joints once you start applying glue and clamps.

A jointer can flatten the face of a board that's as wide as the cutterhead or narrower. Use even pressure with push pads to remove cupping and twist.

You can flatten one face of a board using a thickness planer by supporting it on a sled. Thin wedges or shims keep the workpiece from rocking during the process.

A hand plane working straight across or at an angle to the grain quickly levels the high spots in a panel while minimizing the risk of tearout.

Looking across the tops of a pair of winding sticks helps you see any twist in the panel. To make any discrepancies more apparent, the upper edge of one of the winding sticks is often lighter in color than the other.

## FLATTENING

Once the glue is dry and the clamps come off, the goal line seems much closer. But rushing here can ironically lead to slower progress and frustration.

It's at this point you need to clearly differentiate the flattening stage from the smoothing stage. Then choose the correct tools to meet the need.

The first thing to do is evaluate the panel from a big picture perspective. This will check for overall flatness. Before going any further though, grab a scraper and remove any excess glue, which can interfere with your observations.

**VISUAL AIDS.** I like to use a straightedge to determine if a panel is flat across its width and length. Gaps between the straightedge and panel reveal cup (width) and bow (length). You can see this in the lower right photo. Mark low spots with pencil scribbles.

There's one other test to perform — check for twist. For this, you use a pair of straightedges called winding sticks. One stick goes on each end of the panel, as shown in the upper right photo. Sight across the tops of the sticks. Ideally, they will be parallel. Any tapering shows that the panel is twisted. This combined diagnosis helps determine the next course of action.

**COARSE CORRECTION.** Your task is to bring the high spots of the panel down to the level of the lower spots. This can involve removing a surprising amount of wood. So the tools you select should be capable of making quick, coarse cuts.

The three tools on this page are all good options for this work. I have an affinity for hand tools, so I often use a hand plane. If you work across the grain or at an angle, you can take relatively heavy cuts.

In the power tool category, a belt sander or power planer are solid options. The key with these two tools is to keep them moving. Lingering in one area can create dips (and more work).

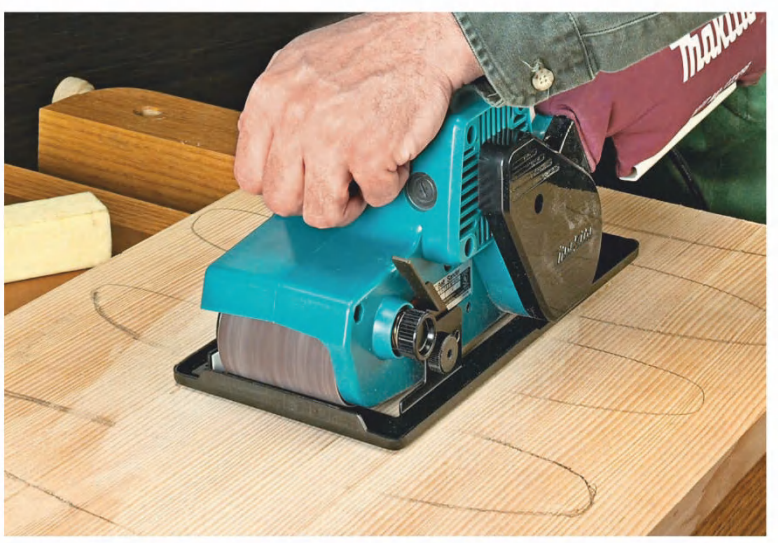

A power planer (top photo) or a belt sander (lower photo) can make quick work of flattening a panel, but go lightly and check your progress often.

A straightedge comes in handy for quickly revealing high and low spots. A 36" aluminum rule is a good choice. Make scribbles with a pencil wherever you see light from under the straightedge.

I find it easiest to work with the cupped face up. Shim the edges, if necessary, to prevent rocking.

The pencil lines you made earlier serve as a gauge to guide your work. Once the lines are gone, grab the straightedge and winding sticks to see if any further flattening is necessary. When you're satisfied, flip the panel over and repeat the steps on the opposite face.

A sharp, finely set hand plane works remarkably fast and produces an unbeatable surface. Just watch out for grain changes along the boards and as you move from one board to the next in the panel.

## SMOOTHING

Tools that remove wood quickly often leave rough surfaces. So once a panel is flat, you can concentrate your efforts on one last remaining stage — smoothing.

Here your gaze zooms in to the smaller imperfections of the surface. Your eyes and your fingers are the best tools for evaluation.

**HAND PLANE.** The classic picture of woodworking usually conjures the image of a sharp plane creating gossamer shavings and a glass-like surface, as shown in the upper right photo. However, as you move from board to board in a wide panel, the grain direction can change dramatically. The ugly tearout that results brings your enjoyment to a screeching halt.

**CABINET SCRAPER.** If you want to stick with hand tools, a cabinet scraper also produces shavings. It works with a high cutting angle that prevents tearout. Although the surface is rougher than what you get with a plane.

**SANDING.** A third option to consider is a 5" random-orbit sander. What's important here is choosing the right grit of disc. Starting with 80- or 100-grit quickly removes the marks left by the flattening step. From there, you can quickly work through the grits. I usually stop at 180- or 220-grit.

Finally, no matter what tool I've used to this point, I hand sand with a sanding block wrapped with 220-grit paper to even out the look of the surface and soften the edges. Then it's ready for finish.

Taking a large solid-wood panel from glueup to final smoothing can feel a little like a choose-your-own-adventure novel. But knowing and understanding the options also provides the freedom to find a path that works right for your project and satisfaction in the time you spend in your shop. W

The metal body of a cabinet scraper is more comfortable to use than a card scraper. The sole helps you keep the surface flat and avoid creating noticeable divots in the workpiece.

When using a random-orbit sander, start with a grit that removes surface flaws the quickest. Then step up through the grits in order. Finish with hand sanding using the last grit.

# Product Showcase

**SUPER MET-AL Wood Filler Floor Repair Stick**

Our specially designed Floor Repair Stick will give you a professional look when repairing scratches and nicks on Wood, Concrete, Laminate, Vinyl floors and surfaces. Made in USA. FREE Samples Call: 1-800-851-8464

**www.skmproducts.com**

**Woodsmith Steel Rules**

- ✓ **Steel rules** with no-glare satin finish
- ✓ **Acid-etched graduations** won't wear off
- ✓ **Handy center-finding rule** on one face
- ✓ **Both left and right-reading** scales
- ✓ **1/16" and 1/32"** increments

**store.woodsmith.com**

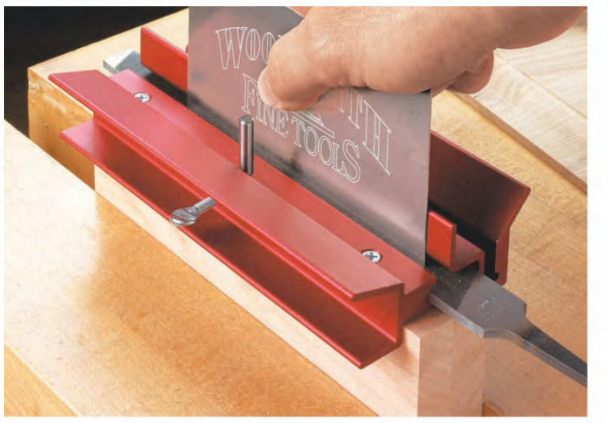

**Woodsmith Cabinet Scraper System**

The Woodsmith Cabinet Scraper System offers a fool-proof method for getting a consistent, razor-sharp edge using only a few simple tools. The secret is in the Woodsmith jig — a unique tool that lets you file the edge and then create a bur.

**https://store.woodsmith.com/product/cabinetscraper**

## MAIL ORDER SOURCES

**Amazon.com**

**Epivots**
866-401-3510
epivots.com

**Hartert-Russell-Home**
615-431-1003
hartert-russell-home.com

**Harvest Reclaimed**
515-204-3139
harvestreclaimed.com

**Home Depot**
800-466-3337
homedepot.com

**Lee Valley**
800-871-8158
leevalley.com

**Magnate**
800-827-2316
magnate.net

**McMaster-Carr**
630-833-0300
mcmaster.com

**Rockler**
800-279-4441
rockler.com

**Wagner Meters**
800-634-9961
wagnermeters.com

**Woodcraft**
800-225-1153
woodcraft.com

# Sources

Most of the materials and supplies you'll need to build the projects are available at hardware stores or home centers. For specific products or hard-to-find items, take a look at the sources listed here. You'll find each part number listed by the company name. See the left margin for contact information.

### FOOD-SAFE FINISHES *(p.14)*

Most woodworking suppliers carry finishes designated as food-safe. MCT oil can be found at many health food stores.

### MOISTURE METERS *(p.20)*

- **Amazon**
  *General Pin Meter* . B00275F5O2
  *Dr. Meter Pinless* B017D6U2DS
- **Wagner Meters**
  *Orion 910* . . . . . .890-00910-001
  *Orion 950* . . . . . .890-00950-001

### CARVING BOARD *(p.24)*

- **Magnate**
  *120° V-groove bit* . . . . . 723

The carving board was finished with a blend of mineral oil and beeswax. The mixture is wiped on, then buffed out.

### MITER SAW STAND *(p.30)*

- **Lee Valley**
  *4" Casters* . . . . . 00K2141
- **McMaster-Carr**
  *Pull Handles* . . . . . 1078A33
- **Rockler**
  *Continuous Hinges* . . . . . 30085
  *Magnetic Catches* . . . . . 26559

### TURNTABLE CONSOLE *(p.36)*

- **McMaster-Carr**
  *Self-Leveling Mount* . . . 9995T91
  *Tapping Inserts* . . . . . 92105A022
  *Rare-Earth Mag*.. . . . . 5862K104
- **Epivots**
  *Invisible Hinges* UIP-203C-US19
- **Hartert-Russell**
  *Lid Flap Stay* . . . . . 373.66.300
  *Lid Door Bracket* . . . . 373.66.381
  *Lid Cabinet Bracket* . . 373.66.394
- **Home Depot**
  *3" Drawer Pull* . . . . . 307791097

The console was stained with *Bartley's* "Jet Mahogany" gel stain. After staining, the console was sprayed with three coats of lacquer.

### FARMHOUSE TABLE & BENCH *(p.46)*

The reclaimed lumber used in the construction of the table was acquired from *Harvest Reclaimed*, a business near Winterset, Iowa that specializes in repurposing lumber from farm buildings in Iowa.

# Origin, a handheld CNC that fits any shop

Welcome to the future of woodworking.
Shaper Origin™ brings precision to
handheld routing at any scale,
no programming required.

shapertools.com

SHAPER

# RIKON®

# EXPANDING ⬅ The ➡ Possibilities

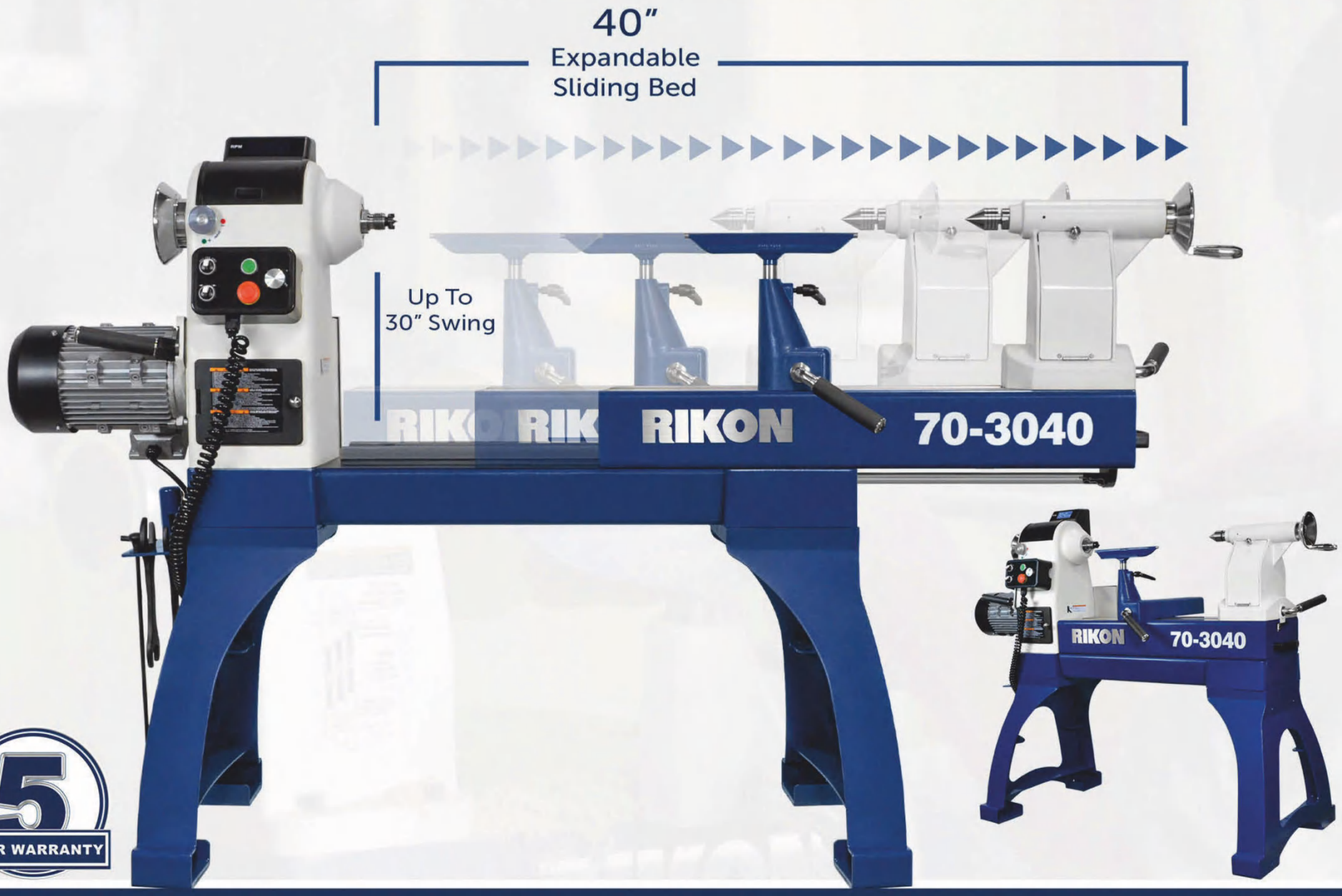


5 YEAR WARRANTY

## Expandable Bed Lathe | 40" Between Centers  Beefy | 3 HP VSR Motor

Beefy **3HP motor** delivers ample power to turn large diameter projects in forward or reverse modes.

**Control Box** has a magnetic back so that it can be set anywhere along the lathe for quick access when turning.

**1-1/4" x 8 TPI threaded spindle** is supported by 4 heavy-duty bearings for precise and dependable turning.

Tailstock's quill extends out to a generous **4-3/4" RAM** travel with precision Acme threading.

Call today for more information **877-884-5167**
or visit **www.rikontools.com** for a dealer near you!